Professional wireless communication system solution supplier

DP405

SERVICE MANUAL



V220927

Kirisun Communications Co.,Ltd.

Contents

1. Overview 1

1.1. Range of Application 1
1.2. Safety Precautions 1
1.3. Maintenance Service 2

2. Appearance and Keys 2

2.1. Appearance 2
2.2. Programmable Keys 3
2.3. LED Indication 4

3. Basic Operation 4

3.1. Powering On/Off 4
3.2. Selecting a Channel 4
3.3. Adjusting Volume 4
3.4. Initiating a Call 4
3.5. Receiving a Call 4
3.6. Calling Back 5

4. Circuit Description 5

4.1. Circuit Composition 5
4.2. TX Circuit 5
4.3. RX Principle 6
4.4. Power Section 7
4.5. IC Characteristics 7
4.5.1. Characteristics of AT1846S 7
4.5.2. Port Description of AT1846S 8
4.5.3. Port Description of Master Chip HS8851 9
4.5.4. Function Description of Semiconductor Devices 12

5. Specifications 13

5.1. Stun, Revive and Remote Monitor 13
5.2. Scan 13
5.3. Zones 14
5.4. Settings 14
5.5. TOT （Time-out-timer） 15
5.6. Emergency Alarm 15
5.7. Setting 16
5.8. Firmware Upgrading 16

6. Assembly and Disassembly 18

6.1. Installing/Uninstalling the Battery 18
6.2. Installing/Uninstalling the Antenna 19
6.3. Installing the Earphone 20
6.4. Detaching the Housing 20

6.5. Detaching Main Board 21
6.6. Explosion Diagram 22
7. Tuning 24
7.1. Tuning Method 24
7.1.1. Parts for Tuning 24
7.1.2. Tuning in PC Test Mode 24
7.2. Radio Testing 25
8. Specification 25
9. Maintenance and Test Equipment 26
10. Troubleshooting 27
Appendix 1 Abbreviations 29
Appendix 2 Material List（Electronic section） 30
Table 1 Material List of Main Board (400~470 MHz) 30
Table 2 Material List of Main Board (350~400 MHz)D 43
Table 3 Material List of Main Board (136~174 MHz) 57
Table 4 Material List of Module Board 70
Appendix 3 Material List (Structural Section) 72
Appendix 4 Accessory List 74
Appendix 5 Schematic Diagrams and Layout Drawing 76
Schematic Diagrams of Main Board 76
Top-Layer Layout Drawing of Main Board 81
Bottom-Layer Layout Drawing of Main Board 82
Schematic Diagrams of Module Board 83
Layout Drawing of Module Board 86

1. Overview

1.1. Range of Application

This manual is intended for the engineers and professional technicians that are trained by Kirisun for the maintenance and repair of DP405 frequency-modulated handheld radio. The parameters in this manual may vary with technology improvement, so for updated technical information, please contact Kirisun or its local dealers.

Please carefully read this manual before repairing the radio.

1.2. Safety Precautions

Electromagnetic Radiation

Radios generate and radiate electromagnetic energy. The security design of Kirisun radio meets national and international standards on electromagnetic radiation. To ensure radio's optimal performance and safe electromagnetic radiation on human, please keep the radio vertical to the ground and 2 to 5 centimeters away from the mouth.

Electromagnetic Interference

To avoid electromagnetic interference, please turn off the radio wherever there are clear warnings, e.g. hospitals, health care centers, airports and other places where radios must be turned off.

Explosive and Harmful Gases

The radio should be turned off in areas where there are explosives and harmful gases, e.g. lower deck of the hull, fuel and chemical storage facilities and area where the air contains chemicals, particles, dust or metal dust.

Please turn off the radio when close to blasting area and electric blasting detonators.

Replacing or charging batteries in potentially explosive atmosphere is prohibited.

Antenna Damage

Do not use radios when the antenna is damaged. Damaged antenna may cause mild burning to human skin.

Battery Life

To prolong the service life of the battery, avoid fully discharging the battery frequently. Please charge and discharge the battery repeatedly if it will be not used for a long time. For satisfactory performance and safety, you are suggested to replace the battery every two years.

Replacing Components

When replacing components, please be aware of the model number. Do not arbitrarily replace any components that do not match Kirisun's requirement.

1.3. Maintenance Service

Paid maintenance service will be provided after the warranty period. Meanwhile, we offer parts to authorized maintenance stations and dealers at preferential prices, except those of discontinued products.

The radio and accessory are provided with warranty service. But if one of the following occurs, no free maintenance is offered.

- No valid warranty card or original invoice.
- Faults caused by unauthorized disassembly, repair and modification.
- Man-made damage such as wear, mechanical damage, burning, and water logging.
- Product serial number is damaged or the product brand is unable to identify.

After the warranty expired, lifetime service is still available. We also provide service components to service station and staff at favorable price.

2. Appearance and Keys

2.1. Appearance

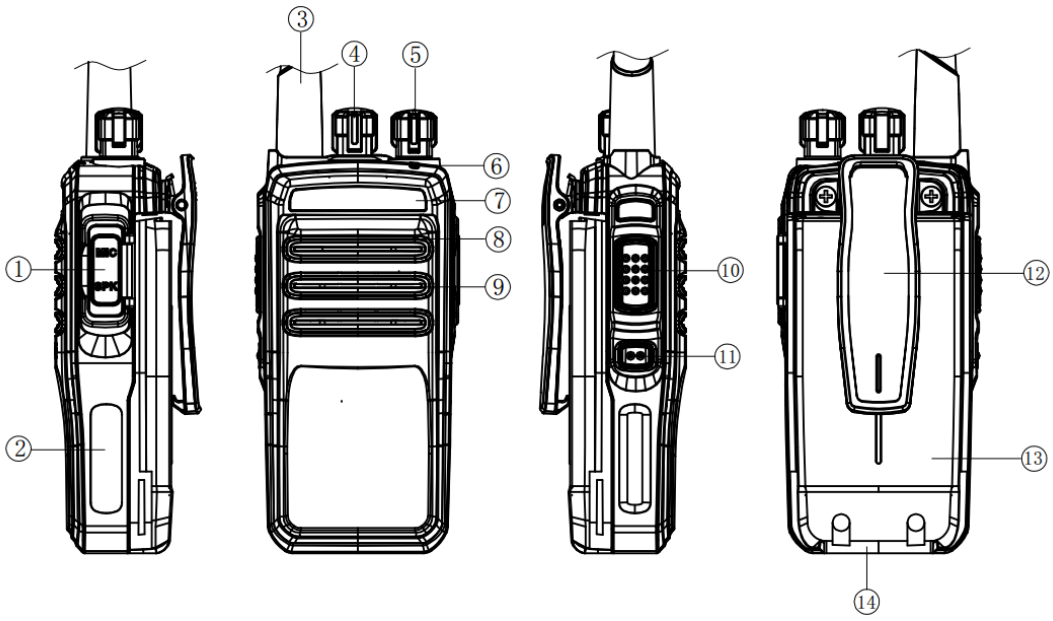

No.	Part Name	No.	Part Name
1	Earphone jack	2	Model Sticker
3	Antenna	4	Channel Knob
5	Volume Knob	6	Light pipe
7	Logo sticker	8	Microphone

9	Speaker	10	PTT key
11	Programmable key	12	Belt clip
13	Battery	14	Battery latch

2.2. Programmable Keys

To cater to your preference, you may have the programmable key defined as a shortcut key by the dealer through programming using the CPS (customer programming software).

Note:

Press: Press down and release quickly.

Press and hold: Press and hold for a period set through the CPS programming software.

No.	Feature	Usage
1	Undefined	Press the key, and the radio will not respond.
2	High/Low Power	Press this key to switch to high/low power.
3	Broadcast Call	Press this key to make a broadcast call.
4	Monitor	If there is CTCSS on the current analogue channel, press this key to switch to carrier squelch mode to cancel CTCSS feature. When the carrier is matched, the voice can be output. Press the key again to go back to the original status.
5	Emergency Alarm	Enable the emergency alarm feature to seek help in emergency.
6	Emergency Alarm Exit	End emergency alarm.
7	Squelch On/Off	Press this key on the analogue channel to forcibly open the voice reception path and receive weak signals on the analogue channel. Pressing this key on digital channel is useless.
8	Zone Selection	Press this key to switch to the next zone.
9	Scan	Press this key to enable Scan and listen to activities on other channels; press it again to disable Scan.
10	Alert Tone On/Off	Press this key to enable all the alert tones and press it again to have them disabled.
11	Nuisance Delete	During scan, when the radio detects an unnecessary channel, e.g. interference channel, the user can select Nuisance Delete menu to delete the channel before the scan continues.

12	Repeater/Talkaround	On the repeater channel, press this key to exit repeater mode.

2.3. LED Indication

LED Indication	Radio Status
Red light on	Emitting signals.
Red light flashing	Low-battery state.
Green light on	Receiving signals (e.g. voice and data), or channel activity detected.
Green light flashing	Scanning for signals.
Orange light flashing	In call hold state, or receiving emergency alarm.

3. Basic Operation

3.1. Powering On/Off

To power on the radio, rotate the Power/Volume knob clockwise until a click is heard.

To power off the radio, rotate the Power/Volume knob counterclockwise until a click is heard.

3.2. Selecting a Channel

In standby state, rotate the Channel knob to select a channel.

3.3. Adjusting Volume

When the radio is on, rotate the Power/Volume knob clockwise to increase the volume or counterclockwise to decrease it.

3.4. Initiating a Call

If the selected channel is digital, you can call the default contact for the selected channel by pressing the PTT key. This contact can be set by the dealer through programming.

3.5. Receiving a Call

When the radio receives RF signals on the selected channel and the squelch level is reached, the green

LED glows to indicate that carrier is received.

When the selected channel is digital channel and when it received individual call, group call or all call, the radio will output the voice from the channel.

When the channel is analogue channel and when it received analogue signals with CTCSS matching the one on this channel (or there is no CTCSS set on the channel), the radio will output voice form the channel.

3.6. Calling Back

When the selected channel is digital channel and after a call is received, press the PTT button within the calling duration to call back. If the calling duration is up, you need to initiate a call. The calling duration can be set by the dealer.

When the selected channel is analogue channel and after a call is received, press the PTT button and speak to the microphone to call back.

4. Circuit Description

4.1. Circuit Composition

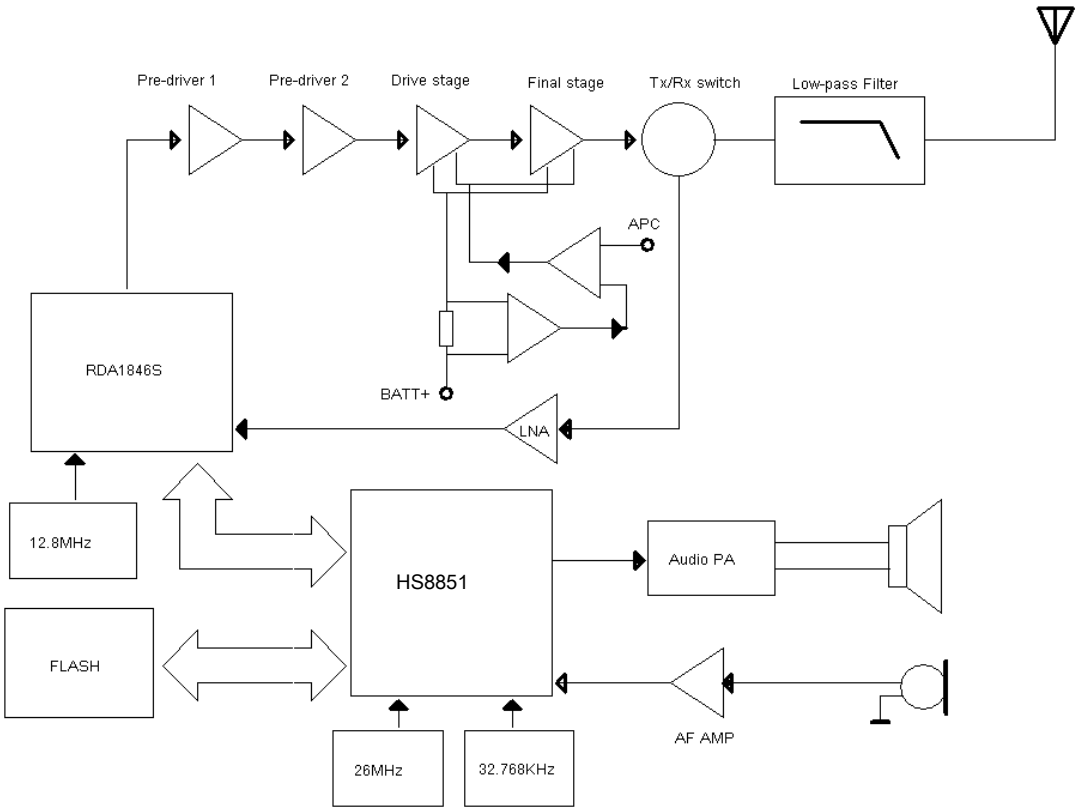

4.2. TX Circuit

The TX circuit is mainly composed of three parts below:

- RF Power Amplification Circuit

RDA1846S outputs RF signal from pin 18 and enters first-level pre-drive amplifier (Q502) for initial amplification; then it enters second-level pre-drive amplifier （Q503） and drive amplifier (Q501) for further power amplification, ensuring sufficient drive power signal can be offered to final amplifier for ultimate power amplification; after amplification by multiple amplifiers, the transmitted signal will complete the output impedance match at the output terminal of final power amplifier through a section of microstripe, so as to minimize output power loss from impedance match failure; afterwards, the transmitted signal will enter the low pass filter through TX/RX switch.

- Low Pass Filter Circuit

The low pass filter which suppresses harmonic wave is an advanced Chebyshev filter composed of lumped parameter inductor and capacitor. On a certain basis of in-band fluctuation, the filter can improve suppression to out-of-band harmonic wave and spurious signal.

- Automatic Power Control Circuit (APC)

In the automatic power control circuit, the drain current from drive power amplifier and final power amplifier completes switch from current to voltage through the sampling resistor and subtraction circuit which is made of the first operational amplifier; the voltage will be compared with the APC control voltage output from DAC at the second operational amplifier, and the error voltage that is output will change the transmitting power through the grid bias voltage of the control power amplifier tube (including the drive level and final level).

4.3. RX Principle

The RX circuit is mainly composed of RF low pass filter, RX/TX switch, low noise amplifier, AT1846S, HS8851 and audio power amplifier.

- RX Circuit Front-end

The signal from antenna is sent though RX/TX switches (D500, D501, D502 and D503) to the U500 (AT1846S) for demodulation and output.

- RX Circuit Back-end

The analogue/digital signal which is demodulated and output by AT1846S, after completing demodulation and processing of digital signal through DSP in HS8851, will be input to digital audio processor module for further processing, and then be switched to analogue voice signal through DAC of codec; the analogue voice signal will finally be amplified by external audio amplifier to drive the speaker.

4.4. Power Section

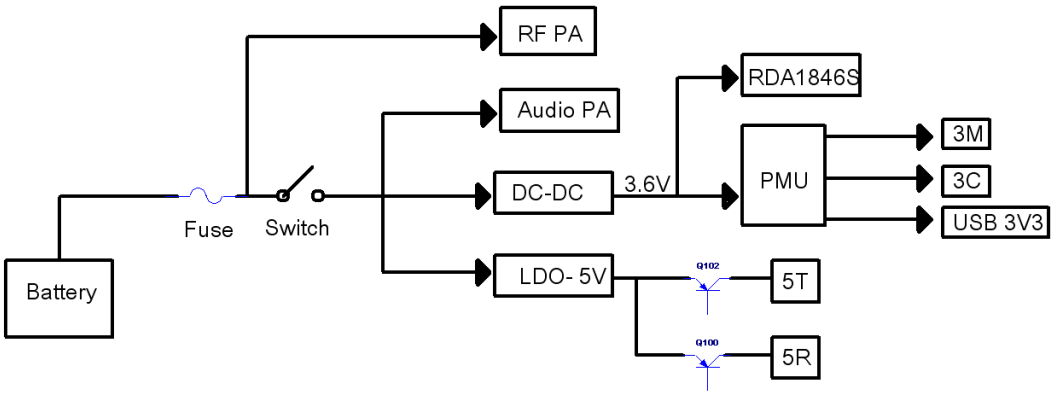

3.6V to supply power to PMU in AT1846S (i.e. RDA1846S) and HS8851 through DC-DC switch; 3M, 3C and USB3.3V output from PMU separately supplies power to other baseband circuits; the battery outputs 5V voltage through LDO and then outputs separate 5T and 5R after control by Q100 and Q102.

RF PA: RF Power Amplifier Circuit Q500 (RD07MUS2B), Q501 (RD01MUS2)

Audio PA: Audio Power Amplifier Circuit U3 (TDA8547TS)

3M: EEPROM IC200 (AT24C512C)

3C: Transistor X500 (12.8M TCXO)

5T: RF Pre-drive Amplifier Circuit Q502 (2SC5108), Q503 (2SC3356)

DC-DC: PMU IC1 (HS8851), U500 (AT1846S)

4.5. IC Characteristics

4.5.1. Characteristics of AT1846S

a. Integrated CMOS RF front-end

b. High linearity low-noise amplifier and mixer

c. Low IF receiver path

- Automatic DC offset calibration circuit
- High performance analogue/digital converter and digital/analogue converter
- Fully-integrated receiver filter
- Digital AGC
- Modulation and demodulation technique based on digital signal processing technology

d. TX path of direct frequency synthesis

- Modulation method of direct frequency synthesis

- TX filter based on digital signal processing technology
- TX modulation gain number is adjustable
- Digital voice activates TX control

e. High-performance fractional PLL frequency synthesizer

- Fully-integrated in-chip RF VCO
- Fully-integrated internal loop filter
- Low phase noise
- Fast lock of phase
- High-frequency resolution with random frequency adjustable
- Built-in transistor frequency error calibration circuit

f. Sleep mode of ultra-low loss

g. Three wire serial digital interface control

4.5.2. Port Description of AT1846S

AVDD	1	Power supply
SCLK	2	Clock input for serial control bus
SDIO	3	Data input/output for serial control bus
AVDD	4	Power supply
XTAL1	5	Oscillator pin 1
XTAL2	6	Oscillator pin 2,control interface select
MODE	7	When MODE = VL, I2C Interface is select; When MODE = VH, SPI Interface is select
SENB	8	Latch enable (active low) input for serial control bus
AFOUT	9	Audio signal output to speaker
NC*	10	No connection
MIC_IN	11	MIC input
Cc	12	Compensation capacitor connection
AVDD	13	Power supply
NC*	14	No connection
RFIN	15	RF signal input
AVDD	16	Power supply

NC*	17	No connection
RFOUT	18	RF signal output
NC*	19	No connection
NC*	20	No connection
AVDD	21	Power supply
PABIAS	22	PA bias supply for PA
AVDD	23	Power supply
PDN	24	Chip enable,high active; Chip sleep,low active
GPIO7	25	Gpio7/vox(When Gpio7=VH, vox is active; else VL)
GPIO6	26	Gpio6 / sq (When Gpio6=VH, sq is active; else VL)
GPIO5	27	Gpio5 / txon (When Gpio5=VH, txon is active; else VL)
GPIO4	28	Gpio4 / rxon (When Gpio4=VH, rxon is active; else VL)
GPIO3	29	Gpio3 / sdo (Gpio3=VH or VL, it is the output register data in 4 wire control Interface mode)
GPIO2	30	Gpio2 / int (When Gpio2=VH, int is active; else VL)
GPIO1	31	Gpio1 / code_in / code_out (Gpio1=VH or VL, it is the input/output code data)
GPIO0	32	Gpio0 / css_in / css_out (Gpio0=VH or VL, it is the input/output CTCSS/CDCSS signal)

4.5.3. Port Description of Master Chip HS8851

Pin No.	Port No.	Port Name	Definition
E11	GPIO_D44	NC	NC
J19	BSENS	MAND_IN	IC level input under Man Down state
L22	ADC_IN	BAT_DET	Battery capacity detection

W13	GPIO_D7	PF	Input from side key
R14	GPIO_D6	BEEP_C	Switch of voice receiving / alert tone
W14	GPIO_D101	EERROM_WP	EEPROM
AA17	GPIO_D24	ECN_3	Channel switch
AB17	GPIO_D23	ECN_2	Channel switch
V15	GPIO_D11	KEYPAD5	4*4 keys
V16	GPIO_D99	KEYPAD3	4*4 keys
V17	GPIO_D100	MAND_C	IC power supply control under Man Down state
AA18	GPIO_D22	EXT_PTT	External PTT
U18	GPIO_D98	KEYPAD2	4*4 keys
V19	GPIO_D96	KEYPAD0	4*4 keys
U19	GPIO_D13	KEYPAD7	4*4 keys
T19	GPIO_D14	NC_GPIO	NC
U21	GPIO_D12	KEYPAD6	4*4 keys
T21	GPIO_D97	KEYPAD1	4*4 keys
V22	GPIO_D10	KEYPAD4	4*4 keys
F5	GPIO_D112	LCD_RS	LCD
AB19	LCD_CS1	LCD_RST	LCD
L21	SSI0_RX	SSI0_RX	FLASH
P21	SSI0_TX	SSI0_TX	LCD/FLASH
N21	SSN0	LCD_CS	LCD
M21	SSN1	FLASH_CS	FLASH
F6	GPIO_D111	NC	NC_GPIO
R21	SSI0_CLK	SSI0_CLK	LCD/FLASH
A12	VOUT_D9	VIO_3V_C	PMU_3V output
J14	GPIO_D76	UART_RXD0	Serial port 0
J15	GPIO_D75	UART_TXD0	Serial port 0
F22	BAT_DET	BAT_DET	Battery detection
J18	GPIO_D25	UART_TXD1	Serial port 1

H18	GPIO_D26	UART_RXD1	Serial port 1
E17	GPIO_D74	TONE_OUT	Output alert tone in PWM mode
E18	VSB	BATTERY	Access of clock to button cell battery
E21	SINK1	NC	NC
D23	SINK2	NC	NC
C18	GPIO_D88	I2C_SDA	EEPROM
A17	VOUT_D2	3M	PMU_3M output
C17	GPIO_D87	I2C_SCL	EEPROM
E14	GPIO_D49	NC	NC
C14	GPIO_D51	AFCO1	Audio power amplifier MUTE
E13	GPIO_D48	5TC	5TC
A13	VOUT_D3	3C	PMU_3M output
C13	GPIO_D52	DACS_SW1	DA_MCP4802
B13	GPIO_D47	5RC	5RC
E12	GPIO_D50	LDAC_PC/TV	DA_MCP4802
C12	GPIO_D53	AFCO2	Speaker output MUTE
A11	GPIO_D46	RDA_PDN	RDA1846S
A10	GPIO_D58	SPI/CS	RDA1846S
F11	GPIO_D2		NC_GPIO
B11	GPIO_D57	SPI/CLK	RDA1846S
B10	GPIO_D56	SPI/DA_OUT	RDA1846S
F10	GPIO_D0	RDA_SQL	SQL
E10	GPIO_D3	KEYPAD_BL	Backlight control
K18	GPIO_D107	NC	NC
B9	GPIO_D21	ECN1	Channel switch
A8	GPIO_D18	GREEN_LED	Green LED control
B8	GPIO_D16	PTT	PTT
A7	GPIO_D19		NC_GPIO
B7	GPIO_D20	ECO_0	Channel switch

C7	GPIO_D17	RED_LED	Red LED control
C3	AUX_OUTP	SPK+	Audio output after demodulation by LT1901
D3	AUX_OUTN	SPK-	NC
D1	M_MICP	AFDET	Transmit to HS8851 after reception and demodulation by AT1846S
D2	M_MICN	NC	NC
E2	HP_MICN	MIC1	Transmit MIC signals to HS8851
H5	DM	USB_DM	USB
J5	DP	USB_DP	USB
L1	HPL_OUT	MOD1	Output digital MIC signals
M1	HPR_OUT	MOD2	NC
D21	SINK3	NC_SINK3	NC
B12	GPIO_D45	NC	NC
C11	GPIO_D55	NC_GPIO	NC
A9	GPIO_D59	APC_SW2	APC_SW2
C9	GPIO_D105	NC_GPIO	NC
C8	GPIO_D43	APC_SW1	APC_SW1
F15	GPIO_D8	NC_GPIO	NC
F14	GPIO_D9	QT/DQT IN	QT/DQT IN
F13	GPIO_D1	LCD_BL	LCD backlight control

4.5.4. Function Description of Semiconductor Devices

Component NO.	MODEL	Description
IC500	NJM2904	APC, voltage comparison, drive.
U21	LT1901A	MCU
IC200	24LC512	E2PROM, saves channel frequency data, feature parameters and modulation parameters.
U3	TDA8547TS	Receiver audio power amplification.
Q500	RD07S2B	TX final power amplification.

Q4	DTA144EE	APC output switch.
Q200	DTC144EE	Red LED driver.
Q201	DTC144EE	Green LED driver.
Q501	RD01MUS1	Transmitter power amplifier drive.
Q601	DTC144EE	Audio power amplifier control switch.
IC100	XC6204B502MR	5R, 5T voltage output.
IC102	MP2359	3.5V voltage DC-DC output.
U20	MCP4802	DA chip, used for modulation of power and frequency stability.
IC302	NJM2904	Operational amplifier for MIC signals.

5. Specifications

5.1. Stun, Revive and Remote Monitor

Stun

You can enable this function, so that the radio can be stunned after receiving a Stun command. A stunned radio can only receive a Revive command but cannot send or receive other signals.

Revive

You can enable this function, so that a stunned radio can be revived after receiving a Revive command. After the radio is revived, it can operate normally again.

Remote Monitor

When the radio receives Remote Monitor command, it will automatically turn on the transmitting and the monitoring party can listen to the surroundings around the monitored radio.

5.2. Scan

Enabling Scan

Press the Scan programmable key to enable Scan and listen to activities on other channels. Press Scan key again to exit Scan.

Scan List

Each channel can be related to one “Scan List” though dealer programming. The radio can only start Scan on channels related with “Scan List”. Each “Scan List” contains a maximum of 16 channels (including the current channel), both analogue channels and digital channels can be contained. By selecting “Scan List” menu, you can check the scan channels included in the “Scan List” used by the current channel.

Note:

if the scan channels in the list are changed, other channels which are related with the same list will be affected during channel scan.

Nuisance (Temporary) Delete

During scan, when the radio stops on an unnecessary channel, e.g. intereference channel, it can select Nuisance Delete to delete this channel before it goes on scanning. You can also add a temporary channel during scan.

After exiting scan mode, the channel which is temporarily deleted or added will turn invalid.

Scanning Revert Channel

During radio scan, press the PTT key to enable the radio to transmit or talk on the preset channel. This channel can be set by local dealer using programming software.

5.3. Zones

A group of available traffic channels constitute a zone. Please select a zone by pressing a side key.

5.4. Settings

The radio can be set to cater to your habits or meet your needs. Settings include power, squelch level, alert tones, sleep mode, CPS password and speech encryption, and they may vary for different dealers.

Power

Under high power, communication distance is longer but battery life is shorter; under low power, communication distance is shorter and battery life is longer. You can set a power level for each channel.

Squelch Level

You can set the squelch level of the radio to any of 0 to 9. The higher the squelch level is, the more noise interference there will be and the harder to receive weak signals.

Alert Tone

You can enable or disable various alert tones via the PC Tool.

Microphone Gain

Microphone gain is the value based on which an audio level is amplified. You can adjust volume by setting a microphone gain. The higher the gain is, the higher the volume will be.

Note:

To avoid speech distortion, do not set a too high gain.

Power-saving Mode

You can enable this mode to enable the radio to automatically enter power-saving mode if it has not transmitted or received carriers for a set period. In this mode, fewer programs are run and less battery is consumed, so that battery life is prolonged.

CPS Password

You can set a password for the CPS (customer programming software).

Speech Encryption

You can enable/disable speech encryption for the current channel, so that speech is sent after encryption.

5.5. TOT （Time-out-timer）

This function is to prevent overlong channel occupation. If the radio keeps transmitting signals for a duration longer than the one set by a dealer through programming, the radio will stop transmitting and warning tone will ring. To stop the tone, release the PTT key. You can transmit again after a period (set by a dealer) by holding down the PTT key.

If early warning is enabled, you will receive an early warning of transmission halt when time is nearly out.

5.6. Emergency Alarm

Under emergency, you can send an emergency alarm by pressing the side key programmed as the Emergency Alarm key. Please specify acousto-optic effect by setting an alarm type and the content to send to other radios in the group by setting an alarm mode.

You can have these settings done by a local dealer through programming. To quit emergency alarm, press the side key programmed as the Quit Emergency Alarm key.

Alarm Types

- Disabled:Alarm is disabled (by default). No alarm is sent when the PTT button is pressed.
- Siren Only: After the radio enters the emergency state, the siren only sounds locally and the control center will not receive any alarm signal.
- Regular:The radio sends emergency alarm and audio-video alert.
- Silent:The radio sends emergency alarm but no audio-video alert. When the radio receives speech signals, the speaker will not be turned on until the PTT button is pressed.
- Silent with voice:The radio sends emergency alarm without audio-video alert. When the radio receives speech signals, there will be no audio-video alert until the PTT button is pressed.

Alarm Modes

- Alarm: The radio sends an emergency alarm and then quits alarm mode.
- Alarm with call: The radio sends an emergency alarm can initiates an emergency call by holding down the PTT key.

● Alarm with voice to follow: The radio sends an emergency alarm and then sends background tone periodically.

Note:

- *An emergency alarm is non-speech signals sent from a radio in a group to other radios in the group, so that alarm prompt will be given off on these radios.*
- *To guarantee communication under emergency, an alarm call has a higher call priority than a common call does.*

5.7. Setting

The radio has been set before delivery. However, to meet customers' requirements, it may be necessary to set such digital functions as operating frequencies, channels, DT/DQT and automatic scan. This can be achieved by the programming software CPSM Vx.xx developed by Kirisun. It is user-friendly and easy to operate, and supports Chinese and English.

To set the parameters of the radio using the software, take the following steps.

(1) Install the software on your PC.

(2) Connect the radio to the PC using the programming cable.

Note:

Make sure the radio is powered on.

While connecting the programming cable for the first time, please install its driver.

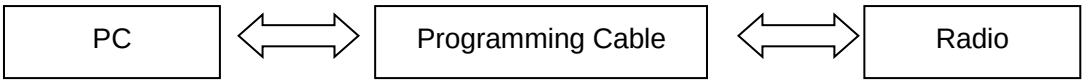

(3) Run the programming software.

(4) Click Setting → Communication Port, and select the correct serial port.

(5) In the software, select Program → Read Data. In the prompted dialog box, click Read. The radio parameters will be read.

(6) In the software interface, modify parameters, select Program → Write Data. In the prompted dialog box, click Write. The radio parameters will be written.

5.8. Firmware Upgrading

To upgrade the radio program using the software, take the following steps.

(1) Power off the radio. Connect the radio to the PC using the programming cable.

Note:

While connecting the programming cable for the first time, please install its driver.

(2) Double click the upgrade tool as shown below.



DMR Software Upgrade Tool.exe

Note:

This tool upgrades firmware while retaining the original programming and calibration data.

(3) The interface as shown below will be displayed.

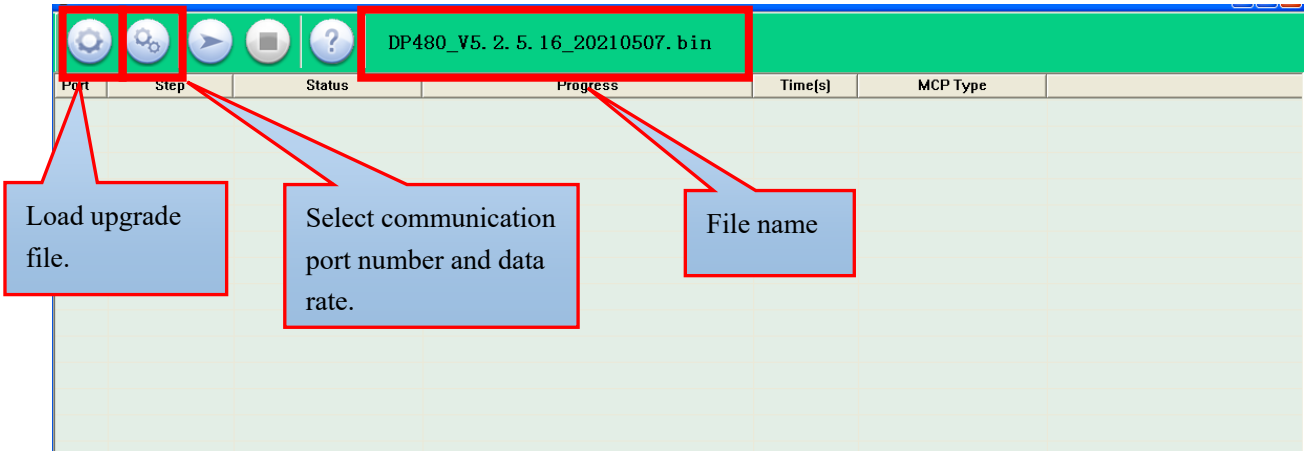

(4) Select the communication port number and the data rate “460800”.

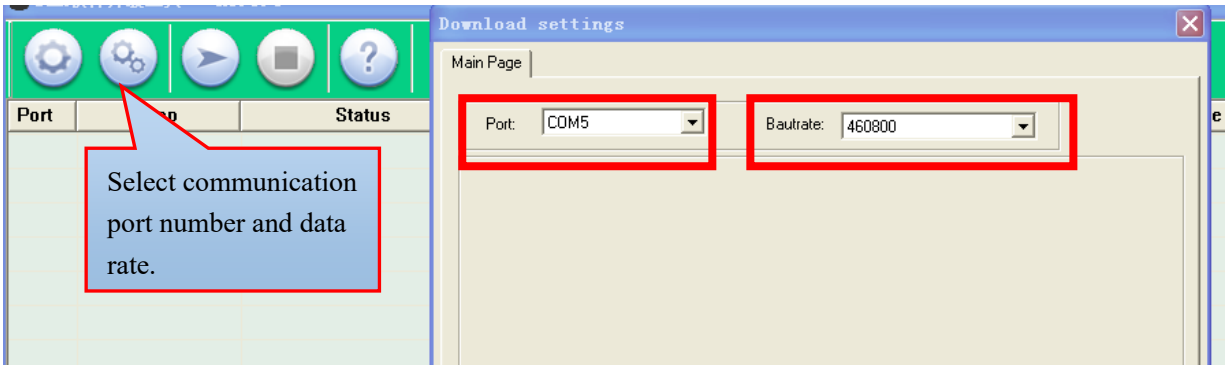

(5) Click Start to start loading, and the message “Waiting” will be displayed.

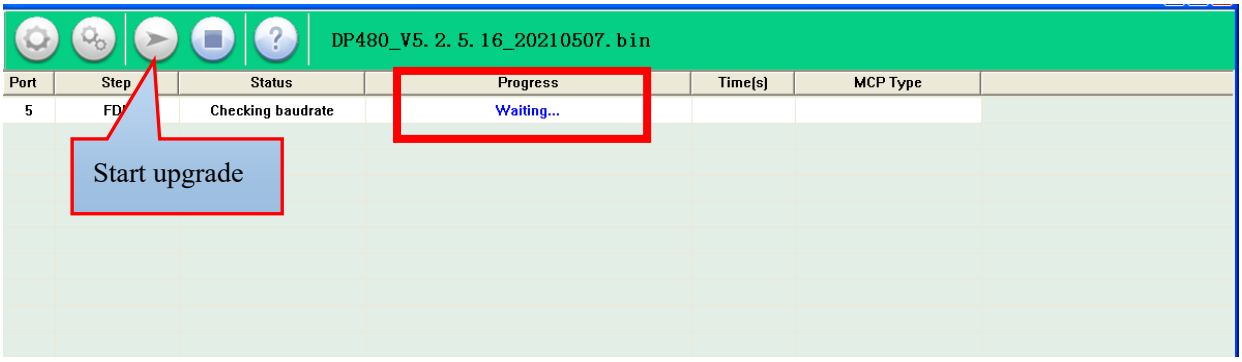

(6) Make sure the programming cable is connected to the radio, and rotate the Power/Volume Knob to power on the radio. Upgrading will be started automatically.

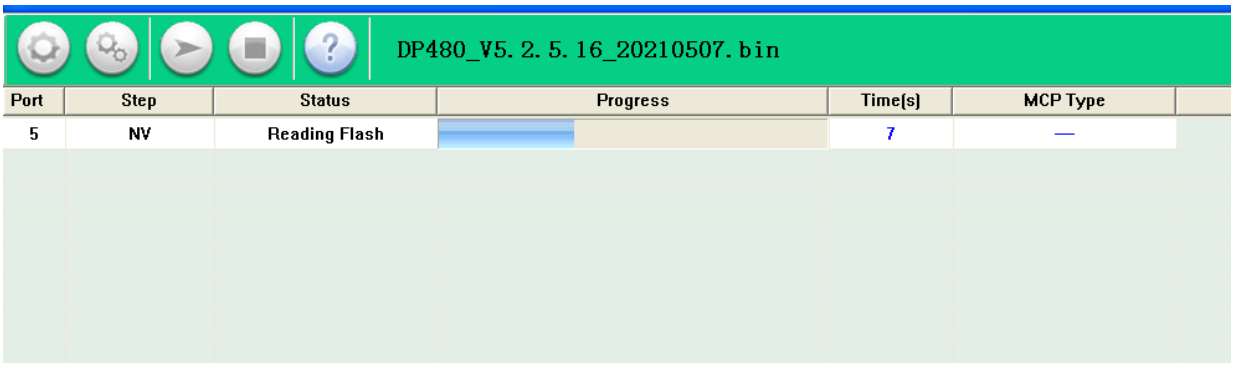

(7) Make sure the programming cable is connected to the radio, and rotate the Power/Volume Knob to power on the radio. Upgrading will be started automatically.

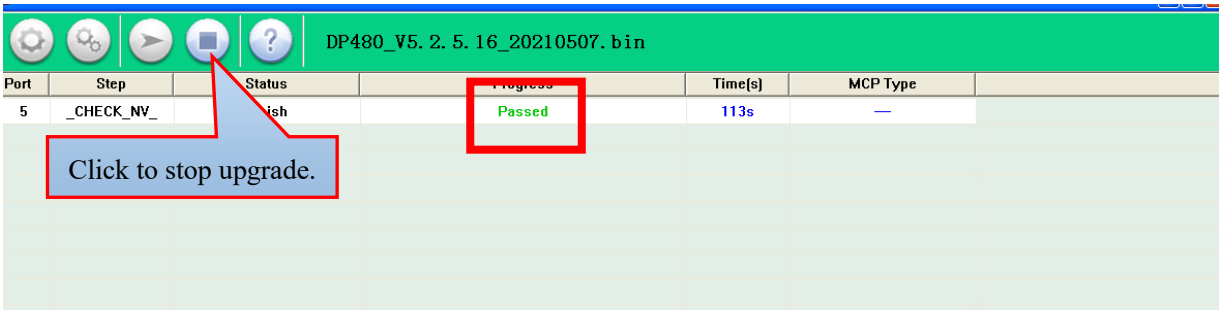

6. Assembly and Disassembly

This radio is a sophisticated communication device with precise and compact structure. Please be careful with the repair.

6.1. Installing/Uninstalling the Battery

Installing the Battery

(1) If he belt clip is installed, press the upper part of the belt clip (NO. 1 in the figure) gently so that it goes up.

(2) Align the battery with the two battery slots on the upper part of the aluminum housing, and then insert the battery in the indicated direction (NO. 2 in the figure).

(3) Press the lower part of the battery so that it is latched (NO. 3 in the figure).

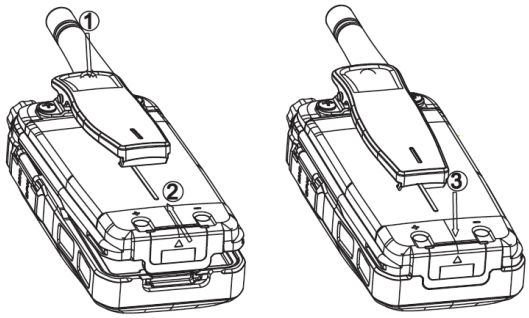

Note：

- *Do not short circuit the battery terminals or throw it into fire.*
- *Do not disassembly the battery housing by yourself.*

Uninstalling the Battery

Power off the radio first, lift the battery latch (NO. 1 in the figure), and the battery goes up. Press the upper part of the belt clip, and take off the battery.

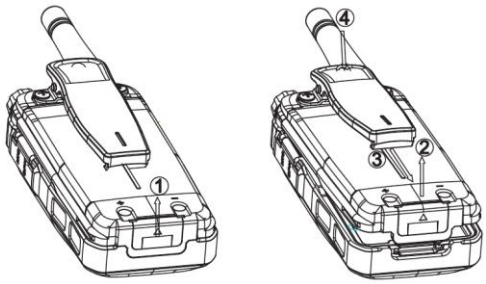

6.2. Installing/Uninstalling the Antenna

Installing the Antenna

Insert the whorled end of the antenna into the slot at the top of the radio, and turn the antenna clockwise to tighten it.

Uninstalling the Antenna

Hold the lower part of the antenna, and then turn it counterclockwise.

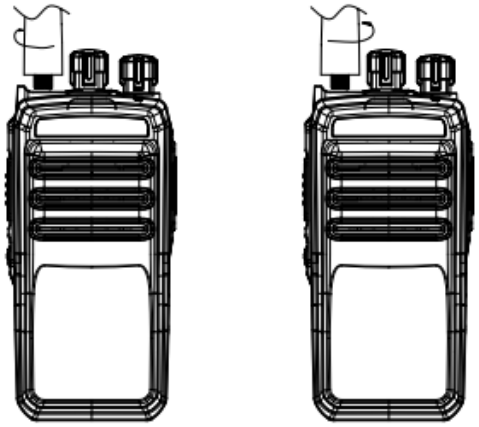

6.3. Installing the Earphone

Open the cover board on the right side of the radio, and insert the earphone plug into the interface.

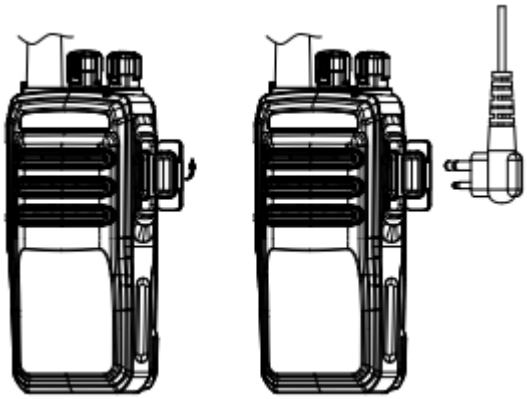

6.4. Detaching the Housing

(1) Detach the antenna;

(2) Detach the two knobs and circlips;

(3) Detach the two knob nuts and antenna nut;

(4) Detach the two screws fastening the belt clip;

(5) Insert the blade of a straight screwdriver into the battery slot of the aluminum-alloy holder, and prise the holder upwards until it goes up;

(6) Hold the aluminum-alloy holder, draw the shell backwards, and then take out the flexible flat cable from the extension socket.

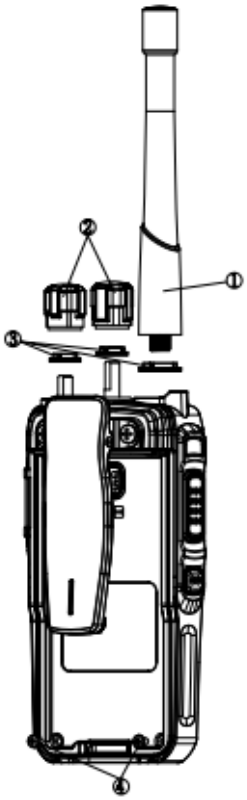

6.5. Detaching Main Board

Take out the screws;

Take out the top waterproof pad and use the soldering iron to detach the antenna; the motherboard (including PTT and PCB) and aluminum bracket can be therefore detached. Be careful when you take out the motherboard and do not damage the connection between PTT PCB and motherboard.

(1) Detach the two screws on the PTT PCB.

(2) Unscrew the seven bolts on the main board.

(3) Unsolder the antenna using a soldering iron (or take down the antenna connector nut), and then separate the main board (including the PTT PCB) and the aluminum-alloy holder.

Note:

Take down the board gently so as to protect the welding of the PTT PCB.

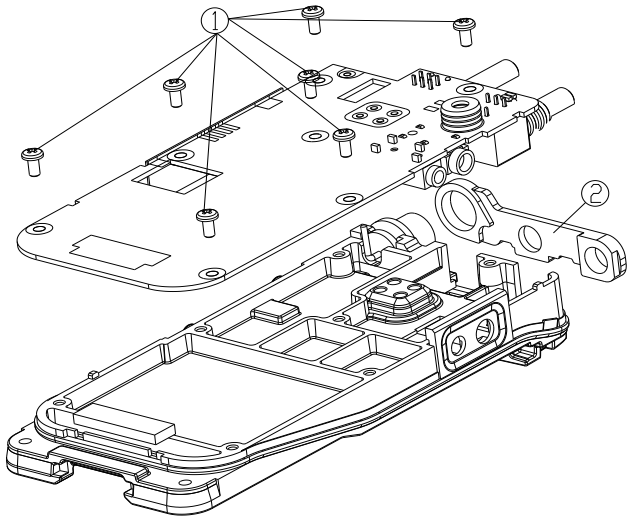

After disassembly, repair and modulation can then be performed.

6.6. Explosion Diagram

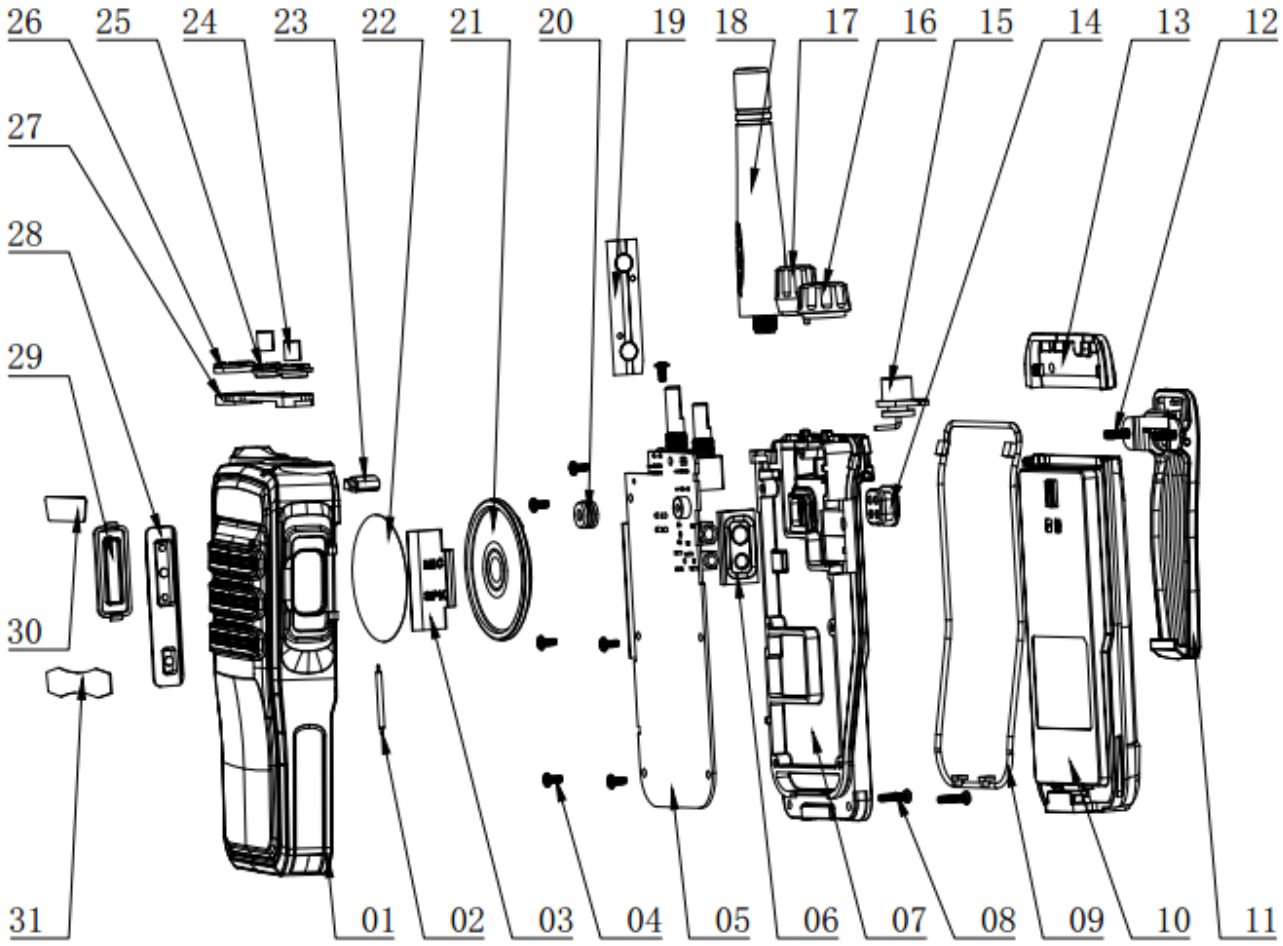

SN	Material Code	Material Name	Specification	QTY
1	7MHP-4169-01B-W0	Front housing	PC365,dual-color(black +	1

			gray), etched, screen print	
2	7MJS-4038-01A-W0	S760 spindle	SUS304, original color	1
3	7MHP-4097-01A-W0	Earphone cover	TPU, black, etched	1
4	7SMF-020040M-SZYB-N	Cross recessed mushroom-head machine screw	Material: hardened iron; Φ2mm*4mm, nickel plated, metric coarse thread, nylok	8
5		Main board	N/A	1
6	7MHP-4097-02A-W0	Waterproof pad for earphone jack	TPU, black, etched	1
7	7MHL-4141-01A-N	Aluminum housing	ADC12, nickel plated	1
8	7SMF-020080M-MHHT-N1	Torx thick-head machine screw	Hardened iron,Φ2mm*8mm, metric coarse thread, nylok	2
9	7MHR-4038-02A-W0	Master waterproof ring	Silica gel, black, high-light	1
10	6SS3-DC4140-B	Battery	Li-ion battery,7.4V, 2000mAh	1
11	6SS3-BJ4038-B	Belt clip	1605 etching, coarse textured	1
12	7SMF-025080M-SZYB-Z1	Cross recessed mushroom-head machine screw	Material: hardened iron; Φ2.5mm*8mm,nickel plated, metric coarse thread	2
13	7MHP-4169-02A-W0	Top cover	PC365, black	1
14	7MHR-4038-05A-W0	Pogo-pin socket	Silica gel, black, high-light	1
15	3CR7-SMA-50JF-4	RF coaxial cable	SMA-J, install using flange, 7200 times of use	1
16	7MHP-4141-04B-W0	Volume knob	ABS, black, oiled cool gray, coarse textured	1
17	7MHP-7210-03B-W0	Coding knob	ABS, black, oiled pantone cool gray, coarse textured	1
18	8ATX-400470-W5	Rubber antenna	400~470MHz, SMA-K (about 7mm long), 155mm long cold-resistant material, with inductor coil	1
19	7MHS-4038-02B-W	Dome array for PTT key	φ6mm, SUS301, four-corner	1
20	7MHR-1727-09A-W3	Hand microphone case	Silica gel, hardness 40°, orange, no surface treatment	1
21	4SS7-4005-016-100C	Speaker	16Ω,1W,Φ40	1
22	7GCB-360001-W0	Water-proof net for speaker	φ36mm,0.1mm thick,black	1
23	7MHR-4169-02A-WC	Light pipe	Silica gel, transparent white, high-light	1
24	7NRC-060090035-W1	Coding nut	Brass, inner diameter 6mm,	1

			outer diameter 9mm, 3.5mm thick	
25	7NRC-060090035-W1	Coding nut	Brass, inner diameter 6mm, outer diameter 9mm, 3.5mm thick	1
26	7NRC-090110025-W1	Antenna connector nut	Inner diameter 9 mm, outer diameter 11mm, 2.5mm thick	1
27	7MHR-4038-04A-W0	Top waterproof pad	Silica gel, black, polished	1
28	7MHR-4169-01A-W0	PTT key	Silica gel, black	1
29	7MHP-4169-05B-W0	PTT key	PC365, co-molding dual-color (black + orange red)	1
30	7PLJ-4169-E01A	Trademark sticker	Transparent PC sheet, 39.8*6.9mm	1

7. Tuning

7.1. Tuning Method

During the repair, if the components are replaced, you need to test and adjust the technical specification of the radio.

7.1.1. Parts for Tuning

(1) Antenna interface converter

(2) Universal interface

7.1.2. Tuning in PC Test Mode

Tx

- Tx Frequency

Under computer mode (frequency stability), adjust Tx frequency as reference frequency within ±100Hz.

- Power

a. Under computer mode (Tx high power) (five frequencies), adjust Tx high power as 3.5-5.0W.

b. Under computer mode (Tx low power) (five frequencies), adjust Tx low power as 0.5-1.5W.

c. Battery low power indication during transmission: set power voltage as 6.5V, and under computer mode (Tx low voltage), click Ok after digits are stable.

Rx

- Maximum Volume

Set the RF frequency of integrated tester as center frequency, signal strength as 1mV, modulated frequency deviation as 3.0 kHz/ 1.5kHz (wide/narrow band). Under computer mode (max volume, wide/narrow band), adjust audio power as 1.2-1.5W.

- Squelch

a. RF signal is set to -121dBm, modulated frequency deviation to 3.0kHz/1.5kHz (narrow/wide band). Under computer mode (SQL on, narrow/wide band) (five frequencies), click Ok when the value is stable.

b. RF signal is set to -123dBm, modulated frequency deviation to 3.0kHz/1.5kHz (wide/narrow ban). Under computer mode (SQL off, narrow/wide band) (three frequencies), click Ok when the value is stable.

7.2. Radio Testing

(1) Testing voltage: 7.5V +/-0.1V room temperature.

(2) Frequency range: 134~174 MHz, 400~470 MHz, 350~400 MHz and 400~520 MHz

The specifications should be tested in the test mode:

- Rx Section

1. Sensitivity: <=-120dBm (0.25uV) (wide band, narrow band) 12dB SINAD

2. Distortion: <=5%

3. Current: static current :<=100mA; received working current: <=400mA

4. Squelch off Sensitivity: when RF input ≤-124dBm, squelch off.

5. Squelch on Sensitivity: when RF input ≥-119dBm, squelch on.

- Tx Section

1. Output Power: high (3.8W---4.8W) low (0.7W---1.3W)

2. Tx Current: high power Tx<= 1.6A; low power Tx <=1.0A

3. Tx Distortion: <=5%

4. Tx Frequency Deviation: reference frequency +/-500Hz

5. Undervoltage Indication: when voltage is 6.2V, the red indicator should flash when pressing PTT, and no Tx power occurs

8. Specification

Product	DP405
Frequency	(136 ~ 174) MHz (350 ~ 400) MHz (400 ~ 470) MHz (400 ~ 520) MHz
Channel Capacity	16 zones*16 channels

Channel Spacing	25 kHz/ 12.5kHz
Operating Voltage	7.4V, cathode grounded
Operating Temperature	-25~+55℃
Antenna Impedance	50Ω
Microphone Impedance	2.2kΩ
Battery	Li-ion battery, DC 7.4V, 2000mAh
Receiving sensitivity (12dB SINAD)	-119dBm
Sensitivity (Level 3)	≤-120dBm
Adjacent Channel Selectivity	≥70dB@25kHz, ≥60dB@12.5kHz
Intermodulation Immunity	≥65dB
Spurious Response Rejection	≥70dB
Audio Output Power	0.5W, @distortion ≤5%, 16Ω
Current Consumption (Rx)	≤400mA
Transmitting Power	4W/1W@7.4V DC (Band U)
Frequency Stability	≤ ±2.5ppm
Maximum Modulation Offset	±5kHz/ ±2.5kHz
Modulation Distortion (300~3000Hz)	≤ 3%
Power of Adjacent Channel	≤-60dBm/ ≤-50dBm
Spurious Emission	≤-36dBm
Current Consumption (Tx)	≤1.5A@ 7.4V DC

9. Maintenance and Test Equipment

Equipment	**Specification**
Standard signal generator	Frequency range: 400~470 MHz Modulation: Frequency modulation and external modulation Output: -127dBm/0.1uV to > -47dBm/1mV
Power meter	Input impedance: 50Ω Operating frequency: 400~470MHz Measurement range: About 10W

Frequency deviation meter	Frequency range: 400~470 MHz
Digital voltmeter	Measurement range: DC 10mV~10V Input impedance: High input impedance of minimum circuit load
Oscilloscope	Max 30MHz DC bandwidth
High-sensitivity frequency counter	Frequency range: 50Hz~10KHz Frequency stability: 0.2ppm or lower
Ammeter	5A
Audio voltmeter	Frequency range: 50Hz~10KHz Voltage range: 1mV~10V
Audio sweep generator	Frequency range: 50Hz~5KHz or higher Output: 0V~1V
Distortion tester	Capability: 3% or lower at 1KHz Input level: 50mV~10Vms
Spectrum analyzer	Measurement range: Max 1GHz DC or higher
Trajectory generator	Center frequency: 50kHz~600MHz Output voltage: 100mv or higher
Dummy load	About 16Ω, 3W
Adjustable power supply	5V~10V, about 5A

10.Troubleshooting

SN	Failure Description	Troubleshooting
1	Startup fails	A. Check remaininly battery capacity. If it is low, charge or replace it. B. Power key not working well. Replace it. C. CPU not working well. Replace it.
2	PLL loses lock (with “di di” alert tone)	A. PLL crystal oscillator X500 fails. Replace it. B. RDA1846S fails. Replace it.
3	Communication fails	A. Communicating parties on different frequencies. Use the same frequency. B. Communicating parties use different CTCSS/DCS signaling codes. Set the same code via PC. C. Out of communication range.
4	Cannot receive signals	A. The antenna in bad contact. Screw up antenna connector. B. Sensitivity too low. Fine tune “tuning mode”.

		C. Squelch level too high, so squelch cannot be enabled. Set a lower level via PC.
5	Red light on during transmitting, but receiver hears no voice	A. Tube power amplifier outputs no power. Replace it. B. The mic not working well. Replace it.
6	Green light on during receiving, but cannot hear voice	A. The speaker not working well. Replace it. B. Audio amplifier U3 not working well. Replace it.
7	Programming fails	Check wiring.

Appendix 1 Abbreviations

AMP	amplify, amplifier
ANT	antenna
APC	automatic power control
BPF	band pass filter
CTCSS	continuous tone control squelch system
DCS	Digital code squelch
DEMOD	demodulation
E2PROM	electrically erasable programmable read only memory
HPF	high pass filter
IDC	instantaneous deviation control
IF	intermediate frequency
LED	Light-Emitting Diode
LNA	low noise amplifier
LPF	low pass filter
MCU	micro control unit
MIC	microphone
MOD	modulation
MONI	monitor
PLL	phase lock loop
PTT	push-to-talk
RX	receiver
SPK	speaker
TCXO	temperature control X' oscillator
TX	transmitter
UL	un-lock
VCO	voltage control oscillator

Appendix 2 Material List（Electronic section）

Table 1 Material List of Main Board (400~470 MHz)

SN	Material Code	Material Name	Specification	QTY	Position
1	133C07000002	Earphone jack	3.5mm, 4-pin, with switch, lead free	1	
2	2RW3-RP08110SNJX-V01	Volume knob	RP08110SNJX-V01-0001, with location column,lead free	1	
3	3CE3-CZ25-D	Earphone jack	2.5mm earphone,PJ-208B,4.5mm high,2.5mm long pin,lead free	1	
4	3SE3-RE08220HX-V02	Encoder switch	4.75mm axis,M6 thread,RE08220HX-V02-0000, lead free	1	
5	4SM7-6027-A40B	Microphone for handheld two-way radio	EM6027MP2.8-C,-20~60°C	1	
6	7MHJ-4169-02A-W	Conductive cloth	14*1.2*0.34	1	
7	7MHJ-8088-01A-W	Single-component epoxy glue	8088.0,250mL/pc	3	
8	7MHP-1010-15A-W	Microphone pad	PVC, transparent	1	

9	7MHP-4229-01A-W	Battery connector	Beryllium copper	1	
10	7MIC-4038-01B-WC	Earphone-jack pad	For 3.5mm earphone	1	
11	1DR1-1SR154-400	SMD rectifier diode	rohm,1SR154-400,4.5mm*2.6mm*2.0mm,-55℃ to 150℃	1	D100
12	1DR1-ESD9B5	TVS diode	ESD9B5.0ST5G,5V,SOD923,lead free	2	D18,D19
13	1DR1-NSR1020MW2T1G	SMD Schottky barrier diode	ON Semiconductor,NSR1020MW2T1G,SOD-323,2.7*1.35*1.0mm	1	D101
14	1DS1-1SS390	SMD switch diode	ROHM,1SS390,1.6mm*0.8mm*0.6mm,-55℃ to 125℃	2	D502,D503
15	1DS1-RN142S	SMD switch diode	ROHM,RN142S,1.6mm*0.8mm*0.6mm,-55℃ to 150℃	2	D500,D501
16	1ID1-MXD2020ML	SMD universal logic IC (accelerometer)	memsic,MXD2020ML,LCC-8,5.0mm*5.0mm*1.99mm,-40℃ to 105℃	1	U4
17	1IL1-NJM2904V	SMD linear IC	JRC,NJM2904V,SSOP-8,-40℃ to 85℃	2	IC500,IC302

18	1IS1-MCP4802-A	D/A converter IC	MICROCHIP,MCP4802	1	U20
19	1IS1-MP2359	SMD switch power supply IC	MPS,MP2359,TSOT23-6,-40 to +85℃	1	IC102
20	1IS1-TDA2822	SMD IC	UTC,TDA2822,SOP8,-20 to +85℃	1	U600
21	1IS1-XC6204B502MR	SMD voltage regulator IC	XC6204B502MR,SOT-25,-40~85°	1	IC100
22	1TC1-UMC4	SMD Darlington tube	Rohm,UMC4N,UMT5,-~150℃	1	U301
23	1TF1-RD01MUS2-501	SMD field effect transistor (for portable digital and analog radios)	MITSUBISHI,RD01MUS2-501,S0T-89,-~150℃	1	Q501
24	1TF1-RD07MUS2B-501	SMD field effect transistor	MITSUBISHI,RD07MUS2B-501,SLP,-~150℃	1	Q500
25	1TF1-SSM3K15AFS	SMD field effect transistor	TOSHIBA,SSM3K15AFS,2-2H1B,-~150℃	2	Q6,Q704
26	1TF1-ST2301	SMD field effect transistor	ST2301,SOT-23-3L,-~150℃	3	Q102,Q20,Q600
27	1TT1-2SA1586	SMD transistor	TOSHIBA,2SA1586,SC-70,-~125℃	1	Q605
28	1TT1-2SC4116-GR	SMD transistor	TOSHIBA,2SC4116-GR,SOT-323/SC-70,-~125℃	1	Q2

29	1TT1-2SC5108-Y	R SMD transistor	TOSHIBA,2SC5108-Y,2-2H1A,-~125℃	1	Q502
30	1TT1-DTC144EE	SMD transistor	ROHM,DTC144EE,EMT3,-~150℃	8	Q103,Q200,Q201,Q4,Q7,Q10,Q606,Q707
31	1TT1-L2SC3356LT1	SMD transistor	LRC,L2SC3356LT1,SOT-23,-~150℃	1	Q503
32	2CC1-10-C0G500-100D	Multi-layer chip capacitor	MURATA,GRM1555C1H100JA01D,10,pF,±5%,50V,0402,C0G	1	C35
33	2CC1-10-C0G500-101J	Multi-layer chip capacitor	MURATA,GRM1555C1H101JA01D,100,pF,±5%,50V,0402,C0G	2	C24,C512
34	2CC1-10-C0G500-330J	Multi-layer chip capacitor	MURATA,GRM1555C1H330JA01D,33,pF,±5%,50V,0402,C0G	2	C506,C521
35	2CC1-10-C0G500-470J	Multi-layer chip capacitor	MURATA,GRM1555C1H470JA01D,47,pF,±5%,50V,0402,C0G	2	C558,C560
36	2CC1-10-C0G500-6R0C	Multi-layer chip capacitor	MURATA,GRM1555C1H6R0CA01D,6,pF,±0.25pF,50V,0402,C0G	2	C520,C561
37	2CC1-10-X7R100-105K	Multi-layer chip capacitor	1005,1μF±10%,10V,X7R	1	R607
38	2CC1-10-X7R160-104K	Multi-layer chip capacitor	MURATA,GRM155R71C104KA88D,100,nF,±10%,16V,0402,X7R	16	C101,C111,C114,C117,C13,C18,C346,C56,C15,C16,C22,C33,C43,C61,C604,C609
39	2CC1-10-X7R160-333K	Multi-layer chip capacitor	MURATA,GRM155R71C333KA01D,33,nF,±10%,16V,0402,X7R	3	C47,R12,C583
40	2CC1-10-X7R160-47	Multi-layer chip	MURATA,GRM155R71C473KA01D,	1	C40

	3K	capacitor	47,nF,±10%,16V,0402,X7R		
41	2CC1-10-X7R160-683K	Multi-layer chip capacitor	MURATA,GRM155R71C683KA88D,68,nF,±10%,16V,0402,X7R	1	C23
42	2CC1-10-X7R250-223K	Multi-layer chip capacitor	MURATA,GRM155R71E223KA61D,22,nF,±10%,25V,0402,X7R	1	C584
43	2CC1-10-X7R500-102K	Multi-layer chip capacitor	MURATA,GRM155R71H102KA01D,1,nF,±10%,50V,0402,X7R	37	C120,C124,C39,C65,C66,C67,C68,C69,C71,C76,C77,C78,C79,C80,C81,C82,C83,C85,C94,C96,C97,C98,C99,C100,C107,C125,C126,C127,C128,C129,C130,C133,C526,C536,C573,C581,R20
44	2CC1-10-X7R500-103K	Multi-layer chip capacitor	MURATA,GRM155R71H103KA88D,10,nF,±10%,50V,0402,X7R	16	C110,C112,C115,C12,C17,C57,C58,C221,C222,C529,C539,C540,C545,C49,C62,C612
45	2CC1-10-X7R500-153K	Multi-layer chip capacitor	MURATA,GRM155R71H153KA12D,15,nF,±10%,50V,0402,X7R	1	C547
46	2CC1-10-X7R500-182K	Multi-layer chip capacitor	MURATA,GRM155R71H182KA01D,1.8,nF,±10%,50V,0402,X7R	1	C31
47	2CC1-10-X7R500-222K	Multi-layer chip capacitor	MURATA,GRM155R71H222KA01D,2.2,nF,±10%,50V,0402,X7R	1	C340
48	2CC1-10-X7R500-271K	Multi-layer chip capacitor	MURATA,GRM155R71H271KA01D,270,pF,±10%,50V,0402,X7R	1	C36
49	2CC1-10-X7R500-471K	Multi-layer chip capacitor	murata,GRM155R71H471KA01D,470,pF,±10%,50V,1005,X7R	38	C102,C104,C113,C118,C122,C6,C14,C230,C231,C232,C233,C332,C519,C522,C523,C528,C530,C531,C532,C533,C535,C537,C538,C541,C549,C550,C551,C552,C553,C554,

					C559,C564,C565,C21,C26,C333,C624,R25
50	2CC1-10-X7R500-472K	Multi-layer chip capacitor	MURATA,GRM155R71H472KA01D,4.7,nF,±10%,50V,0402,X7R	1	C527
51	2CC1-10-X7R500-682K	Multi-layer chip capacitor	MURATA,GRM155R71H682KA88D,6.8,nF,±10%,50V,0402,X7R	2	C55,R30
52	2CC1-10-Y5V160-105Z	Multi-layer chip capacitor	murata,GRM155R61C105KA12D,1,uF,+80%/-20%,16V,1005,Y5V	2	C95,C59
53	2CC1-16-C0G500-120J	Multi-layer chip capacitor	murata,GRM1885C1H120JA01D,12,pF,±5%,50V,1608,C0G	1	C508
54	2CC1-16-C0G500-121J	Multi-layer chip capacitor	murata,GRM1885C1H121JA01D,120,pF,±5%,50V,1608,C0G	1	C511
55	2CC1-16-C0G500-150J	Multi-layer chip capacitor	murata,GRM1885C1H150JA01D,15,pF,±5%,50V,1608,C0G	2	C507,C509
56	2CC1-16-C0G500-180J	Multi-layer chip capacitor	murata,GRM1885C1H180JA01D,18,pF,±5%,50V,1608,C0G	1	C502
57	2CC1-16-C0G500-2R0C	Multi-layer chip capacitor	murata,GRM1885C1H2R0CA01D,2,pF,±0.25pF,50V,1608,C0G	2	C504,C514
58	2CC1-16-C0G500-300J	Multi-layer chip capacitor	murata,GRM1885C1H300JA01D,30,pF,±5%,50V,1608,C0G	2	C500,C501
59	2CC1-16-C0G500-3R0C	Multi-layer chip capacitor	murata,GRM1885C1H3R0CA01D,3,pF,±0.25pF,50V,1608,C0G	2	C503,C505
60	2CC1-16-C0G500-4R	Multi-layer chip	murata,GRM1885C1H4R0CA01D,4,	1	C516

	0C	capacitor	pF,±0.25pF,50V,1608,C0G		
61	2CC1-16-C0G500-5R0C	Multi-layer chip capacitor	murata,GRM1885C1H5R0CA01D,5,pF,±0.25pF,50V,1608,C0G	1	C513
62	2CC1-16-C0G500-6R0C	Multi-layer chip capacitor	murata,GRM1885C1H6R0CA01D,6,pF,±0.25pF,50V,1608,C0G	1	C515
63	2CC1-16-X7R500-471K	Multi-layer chip capacitor	murata,GRM188R71H471KA01D,470,pF,±10%,50V,1608,X7R	1	L520
64	2CC1-20-X7R6R3-475K	Multi-layer chip capacitor	murata,GRM219R6J475KE19D,4.7,uF,±10%,6.3V,2012,X7R	3	C50,C51,C617
65	2CC1-20-Y5V160-106Z	Multi-layer chip capacitor	murata,GRM21BF51C106ZE15L,10,uF,+80%/-20%,16V,2012,Y5V	14	C10,C11,C103,C108,C119,C121,C123,C136,C20,C106,C582,C25,C606,C615
66	2LG1-VLS3012ET-100M	SMD power inductor	TDK,VLS3012ET-100M,10,uH,±20%,3*3*1.2	1	L107
67	2LH1-R401R5-R02-05	SMD air core inductor	E20.40*1.5*2TL	1	L500
68	2LH1-R401R5-R03-05	SMD air core inductor	E20.40*1.5*3TL	3	L501,L503,L505
69	2LH1-R401R5-R04-05	SMD air core inductor	E20.40*1.5*4TL	1	L502
70	2LH1-R401R5-R08-05	SMD air core inductor	E20.40*1.5*8TL	1	L507
71	2LH1-R501R5-L05-0	SMD air core	E20.50*1.5*5TR	1	L506

	5	inductor			
72	2LL1-16-22NJB	Multi-layer chip inductor	SunLord,SDCL1608C22NJTDF,22,nH,±5%,1608	2	L509,L511
73	2LL1-16-2N7SA	Multi-layer chip inductor	SunLord,SDCL1608C2N7STDF,2.7,nH,±2%,1608	1	L504
74	2LW1-16UC-180J	SMD wire wound inductor	sagami,C1608CB-18NJ,18,nH,±5%,1608	1	L5
75	2LW1-20UC-221J	SMD wire wound inductor	murata,LQW2BHNR22J03L,220,nH,±5%,2012	1	L508
76	2RE1-10-1003	SMD precision resistor	1005,100K±1%	2	R105,R107
77	2RE1-10-1602	SMD precision resistor	YAGEO,RC0402FR-0716K2L,16.2,KΩ,±1%,0402	1	R106
78	2RE1-10-6802	SMD precision resistor	yageo,RC0402FR-0768KL,68,KΩ,±1%,0402	1	R104
79	2RE1-16-1003	SMD precision resistor	yageo,RC0603FR-07100KL,100,KΩ,±1%,0603	2	R527,R528
80	2RE1-16-1503	SMD precision resistor	yageo,RC0603FR-07150KL,150,KΩ,±1%,0603	2	R518,R525
81	2RE1-16-2203	SMD precision resistor	yageo,RC0603FR-07220KL,220,KΩ,±1%,0603	1	R42
82	2RS1-10-000O	Chip resistor	yageo,RC0402JR-070RL,0,Ω,±5%,0	30	C32,R102,R109,R71,R72,R167,R11,R26,R251,R252,C28,C569,C577,R17,R504,R516,R

			402		555,C19,C27,C45,R1,R15,R32,R41,R43,R75,R624,R22,R21,IC301(pin2-3)
83	2RS1-10-100J	Chip resistor	yageo,RC0402JR-0710RL,10,Ω,±5%,0402	3	R66,R244,R559
84	2RS1-10-101J	Chip resistor	yageo,RC0402JR-07100RL,100,Ω,±5%,0402	1	R36
85	2RS1-10-102J	Chip resistor	yageo,RC0402JR-071KL,1KΩ,±5%,0402	18	R108,R60,R236,R237,R238,R239,R3,R6,R10,R502,R539,R544,R545,R547,R551,R623,R45,R340
86	2RS1-10-103J	Chip resistor	yageo,RC0402JR-0710KL,10,KΩ,±5%,0402	15	R103,R110,R13,R40,R52,R53,R57,R58,R59,R68,R70,R245,R601,R614,R617
87	2RS1-10-104J	Chip resistor	yageo,RC0402JR-07100KL,100,KΩ,±5%,0402	2	R63,R526
88	2RS1-10-150J	Chip resistor	yageo,RC0402JR-0715RL,15,Ω,±5%,0402	1	R73
89	2RS1-10-152J	Chip resistor	yageo,RC0402JR-071K5L,1.5,KΩ,±5%,0402	1	R507
90	2RS1-10-153J	Chip resistor	yageo,RC0402JR-0715KL,15,KΩ,±5%,0402	2	R512,R542
91	2RS1-10-155J	Chip resistor	yageo,RC0402JR-071M5L,1.5,MΩ,±5%,0402	1	C109
92	2RS1-10-182J	Chip resistor	yageo,RC0402JR-071K8L,1.8,KΩ,±5%,0402	1	R618

93	2RS1-10-203J	Chip resistor	yageo,RC0402JR-0720KL,20,KΩ,±5%,0402	4	C4,R529,C54,C73
94	2RS1-10-220J	Chip resistor	yageo,RC0402JR-0722RL,22,Ω,±5%,0402	1	R511
95	2RS1-10-221J	Chip resistor	yageo,RC0402JR-07220RL,220,Ω,±5%,0402	2	R249,R250
96	2RS1-10-222J	Chip resistor	yageo,RC0402JR-072K2L,2.2,KΩ,±5%,0402	2	R246,R247
97	2RS1-10-223J	Chip resistor	yageo,RC0402JR-0722KL,22,KΩ,±5%,0402	2	R27,C34
98	2RS1-10-271J	Chip resistor	yageo,RC0402JR-07270RL,270,Ω,±5%,0402	1	R505
99	2RS1-10-330J	Chip resistor	yageo,RC0402JR-0733RL,33,Ω,±5%,0402	1	R510
100	2RS1-10-333J	Chip resistor	yageo,RC0402JR-0733KL,33,KΩ,±5%,0402	6	R65,R67,C611,R18,R31,R616
101	2RS1-10-392J	Chip resistor	yageo,RC0402JR-073K9L,3.9,KΩ,±5%,0402	1	R632
102	2RS1-10-393J	Chip resistor	yageo,RC0402JR-0739KL,39,KΩ,±5%,0402	1	R631
103	2RS1-10-470J	Chip resistor	yageo,RC0402JR-0747RL,47,Ω,±5%,0402	1	R500

104	2RS1-10-471J	Chip resistor	yageo,RC0402JR-07470RL,470,Ω,±5%,0402	4	R14,R612,R615,R622
105	2RS1-10-472J	Chip resistor	yageo,RC0402JR-074K7L,4.7,KΩ,±5%,0402	3	R39,R561,R562
106	2RS1-10-473J	Chip resistor	yageo,RC0402JR-0747KL,47,KΩ,±5%,0402	15	R4,R227,R240,R241,R242,R243,R501,R508,R513,R540,R541,R557,R558,R61,R62
107	2RS1-10-474J	Chip resistor	yageo,RC0402JR-07470KL,470,KΩ,±5%,0402	2	C74,R83
108	2RS1-10-4R7J	Chip resistor	yageo,RC0402JR-074R7L,4.7,Ω,±5%,0402	2	R84,R85
109	2RS1-10-511J	Chip resistor	yageo,RC0402JR-07510RL,510,Ω,±5%,0402	1	C44
110	2RS1-10-561J	Chip resistor	yageo,RC0402JR-07560RL,560,Ω,±5%,0402	1	C578
111	2RS1-10-562J	Chip resistor	yageo,RC0402JR-075K6L,5.6,KΩ,±5%,0402	1	R613
112	2RS1-10-563J	Chip resistor	yageo,RC0402JR-0756KL,56,KΩ,±5%,0402	2	R509,R38
113	2RS1-10-564J	Chip resistor	yageo,RC0402JR-07560KL,560,KΩ,±5%,1005	1	R29
114	2RS1-10-682J	Chip resistor	yageo,RC0402JR-076K8L,6.8,KΩ,±5%,1005	1	R503

115	2RS1-10-821J	Chip resistor	yageo,RC0402JR-07820RL,820,Ω,±5%,1005	1	R37
116	2RS1-16-000O	Chip resistor	yageo,RC0603JR-070RL,0,Ω,±5%,1608	15	L100,L29,L30,L47,L48,L3,L6,L33,L510,R9,R519,R44,R46,R602,R610
117	2RS1-16-225J	Chip resistor	yageo,RC0603JR-072M2L,2.2,MΩ,±5%,1608	1	R517
118	2RS1-16-271J	Chip resistor	yageo,RC0603JR-07270RL,270,Ω,±5%,1608	1	R515
119	2RS1-16-560J	Chip resistor	yageo,RC0603JR-0756RL,56,Ω,±5%,1608	1	L513
120	2RS1-16-623J	Chip resistor	yageo,RC0603JR-0762KL,62,KΩ,±5%,1608	1	R8
121	2RS1-20-000O	Chip resistor	yageo,RC0805JR-070RL,0,Ω,±5%,2012	2	C64,C605
122	2RS1-32-R39J	Chip resistor	yageo,RC1206JR-070R39L,0.39,Ω,±5%,3216	4	R520,R521,R522,R523
123	3FW1-0805L035	Fuse	Littelfuse,0805L035,0603,-40 to +85℃,CCC certified explosion protection	1	F101
124	3FW1-42932-302320	SMD fuse	littelfuse,429003/433003/466003,3216,3A/32V,CCC certified explosion protection	1	F100
125	4PE1-16-F2	EVERLIGHT	EVERLIGHT,19-21SURC/S530-A2/T	1	D203

			R8,0603,-40~85°C		
126	4PE1-16-F5	EVERLIGHT	EVERLIGHT,H19-213SYGC,0603,-40~85°C	1	D205
127	5FE1-BLM11A601S	SMD EMI filter	murata,BLM18AG601SN1D,1608.0	43	L70,L104,L105,L8,L9,L10,L11,L12,L13,L14,L18,L31,L34,L35,L36,L37,L38,L39,L40,L41,L42,L43,L44,L51,L52,L53,L54,L55,L56,L57,L58,L59,L60,L62,L63,L64,L67,L68,L300,L515,L521,L32,L600
128	5FE1-BLM21P300S	SMD EMI filter	murata,BLM21PG300SN1D,2012.0	2	L512,L514
129	5OT1-12R8-HHL-0303	Voltage controlled temperature compensated crystal oscillator	DSA321SCL,3.0V,12.8MHz±2.5ppm,-30℃~+75℃,3225	1	X500
130	61SL000007	HS8861 module (software burning suite)	HK MODULE UPGRADING SOFTWARE	1	IC1
131	6PM7-4169-HMF	Main board (U/V band)	47.6*100.7,1.0,4.0,1.0,immersion gold,CCC certified explosion protection	1	PCB
132	7MDC-4207-04A-W	Power shield cover	Copper-Nickel-Zinc alloy, 0.2 mm thick, square, 16.2*15.1*2.3	1	P1
133	9FSX-LF-RMAF8F2	Solder paste	Lead free,HF-RD8F2,Sn96.5-Ag3.0-Cu0.5	1	

134	112C03000273	Ceramic capacitor	YAGEO,CC0603JRNPO9BN680,68pF,±5%,50V,0603,NPO	1	C510
135	112C03000367	Ceramic capacitor	CC0603KRX7R9BB102,1nF,±10%,50V,1608,X7R	6	C29,C42,C48,C52,C53,C60
136	121I05000076	SMT IC	AT1846S, lead free	1	U500
137	9FSC0100001	Hardware version	F	1	

Table 2 Material List of Main Board (350~400 MHz)

SN	Material Code	Material Name	Specification	QTY	Position
1	1DR1-1SR154-400	SMD rectifier diode	rohm,1SR154-400,4.5mm*2.6mm*2.0mm,-55℃ to 150℃	1	D100
2	1DR1-ESD9B5	TVS diode	ESD9B5.0ST5G,5V,SOD923,lead free	2	D18,D19
3	1DR1-NSR1020MW2T1G	SMD Schottky barrier diode	ON Semiconductor,NSR1020MW2T1G,SOD-323,2.7*1.35*1.0mm	1	D101
4	1DS1-1SS390	SMD switch diode	ROHM,1SS390,1.6mm*0.8mm*0.6mm,-55℃ to 125℃	2	D502,D503
5	1DS1-RN142S	SMD	ROHM,RN142S,1.6mm*0.8mm*0.6m	2	D500,D501

		switch diode	m,-55℃ to 150℃		
6	1ID1-MXD2020ML	SMD universal logic IC (accelerometer)	memsic,MXD2020ML,LCC-8,5.0mm*5.0mm*1.99mm,-40℃ to 105℃	1	U4
7	1IL1-NJM2904V	SMD linear IC	JRC,NJM2904V,SSOP-8,-40℃ to 85℃	2	IC500,IC302
8	1IS1-MCP4802-A	D/A converter IC	MICROCHIP,MCP4802	1	U20
9	1IS1-MP2359	SMD switch power supply IC	MPS,MP2359,TSOT23-6,-40 to +85℃	1	IC102
10	1IS1-TDA2822	SMD IC	UTC,TDA2822,SOP8,-20 to +85℃	1	U600
11	1IS1-XC6204B502MR	SMD voltage regulator IC	XC6204B502MR,SOT-25,-40~85°	1	IC100
12	1TC1-UMC4	SMD Darlington tube	Rohm,UMC4N,UMT5,-~150℃	1	U301
13	1TF1-RD01MUS2-501	SMD field effect transistor (for portable digital and analog radios)	MITSUBISHI,RD01MUS2-501,S0T-89,-~150℃	1	Q501

14	1TF1-RD07MUS2B-501	SMD field effect transistor	MITSUBISHI,RD07MUS2B-501,SLP,-~150℃	1	Q500
15	1TF1-SSM3K15AFS	SMD field effect transistor	TOSHIBA,SSM3K15AFS,2-2H1B,-~150℃	2	Q6,Q704
16	1TF1-ST2301	SMD field effect transistor	ST2301,SOT-23-3L,-~150℃	3	Q102,Q20,Q600
17	1TT1-2SA1586	SMD transistor	TOSHIBA,2SA1586,SC-70,-~125℃	1	Q605
18	1TT1-2SC4116-GR	SMD transistor	TOSHIBA,2SC4116-GR,SOT-323/SC-70,-~125℃	1	Q2
19	1TT1-2SC5108-Y	R SMD transistor	TOSHIBA,2SC5108-Y,2-2H1A,-~125℃	1	Q502
20	1TT1-DTC144EE	SMD transistor	ROHM,DTC144EE,EMT3,-~150℃	8	Q103,Q200,Q201,Q4,Q7,Q10,Q606,Q707
21	1TT1-L2SC3356LT1	SMD transistor	LRC,L2SC3356LT1,SOT-23,-~150℃	1	Q503
22	2CC1-10-C0G500-100D	Multi-layer chip capacitor	MURATA,GRM1555C1H100JA01D,10,pF,±5%,50V,0402,C0G	1	C35
23	2CC1-10-C0G500-101J	Multi-layer chip capacitor	MURATA,GRM1555C1H101JA01D,100,pF,±5%,50V,0402,C0G	1	C24
24	2CC1-10-C0G500-120J	Multi-layer chip capacitor	MURATA,GRM1555C1H120JA01D,12,pF,±5%,50V,0402,C0G	1	C520
25	2CC1-10-C0G500-150J	Multi-layer chip capacitor	MURATA,GRM1555C1H150JA01D,15,pF,±5%,50V,0402,C0G	2	C519,R504

26	2CC1-10-C0G500-151J	Multi-layer chip capacitor	MURATA,GRM1555C1H151JA01D,150,pF,±5%,50V,0402,C0G	1	C573
27	2CC1-10-C0G500-1R0C	Multi-layer chip capacitor	MURATA,GRM1555C1H1R0CA01D,1,pF,±0.25pF,50V,0402,C0G	1	C135
28	2CC1-10-C0G500-360J	Multi-layer chip capacitor	MURATA,GRM1555C1H360JA01D,36,pF,±5%,50V,0402,C0G	1	C518
29	2CC1-10-C0G500-390J	Multi-layer chip capacitor	MURATA,GRM1555C1H390JA01D,39,pF,±5%,50V,0402,C0G	1	C521
30	2CC1-10-C0G500-820J	Multi-layer chip capacitor	MURATA,GRM1555C1H820JA01D,82,pF,±5%,50V,0402,C0G	2	C512,C558
31	2CC1-10-C0G500-R50B	Multi-layer chip capacitor	MURATA,GRM1555C1HR50BA01D,0.5,pF,±0.1pF,50V,0402,C0G	1	C561
32	2CC1-10-X7R100-105K	Multi-layer chip capacitor	1005,1μF±10%,10V,X7R	2	R607,C95
33	2CC1-10-X7R160-104K	Multi-layer chip capacitor	MURATA,GRM155R71C104KA88D,100,nF,±10%,16V,0402,X7R	16	C101,C111,C114,C117,C13,C18,C346,C56,C15,C16,C22,C33,C43,C61,C604,C609
34	2CC1-10-X7R160-333K	Multi-layer chip capacitor	MURATA,GRM155R71C333KA01D,33,nF,±10%,16V,0402,X7R	3	C47,R12,C583
35	2CC1-10-X7R160-473K	Multi-layer chip capacitor	MURATA,GRM155R71C473KA01D,47,nF,±10%,16V,0402,X7R	1	C40
36	2CC1-10-X7R160-683K	Multi-layer chip capacitor	MURATA,GRM155R71C683KA88D,68,nF,±10%,16V,0402,X7R	1	C23

37	2CC1-10-X7R250-223K	Multi-layer chip capacitor	MURATA,GRM155R71E223KA61D,22,nF,±10%,25V,0402,X7R	2	C59,C584
38	2CC1-10-X7R500-102K	Multi-layer chip capacitor	MURATA,GRM155R71H102KA01D,1,nF,±10%,50V,0402,X7R	36	C120,C124,C39,C65,C66,C67,C68,C69,C71,C76,C77,C78,C79,C80,C81,C82,C83,C85,C94,C96,C97,C98,C99,C100,C107,C125,C126,C127,C128,C129,C130,C133,C526,C536,C581,R20
39	2CC1-10-X7R500-103K	Multi-layer chip capacitor	MURATA,GRM155R71H103KA88D,10,nF,±10%,50V,0402,X7R	15	C110,C112,C115,C12,C17,C57,C58,C221,C222,C529,C539,C540,C49,C62,C612
40	2CC1-10-X7R500-153K	Multi-layer chip capacitor	MURATA,GRM155R71H153KA12D,15,nF,±10%,50V,0402,X7R	2	C547,C545
41	2CC1-10-X7R500-182K	Multi-layer chip capacitor	MURATA,GRM155R71H182KA01D,1.8,nF,±10%,50V,0402,X7R	1	C31
42	2CC1-10-X7R500-222K	Multi-layer chip capacitor	MURATA,GRM155R71H222KA01D,2.2,nF,±10%,50V,0402,X7R	1	C340
43	2CC1-10-X7R500-271K	Multi-layer chip capacitor	MURATA,GRM155R71H271KA01D,270,pF,±10%,50V,0402,X7R	1	C36
44	2CC1-10-X7R500-471K	Multi-layer chip capacitor	murata,GRM155R71H471KA01D,470,pF,±10%,50V,1005,X7R	37	C102,C104,C113,C118,C122,C6,C14,C230,C231,C232,C233,C332,C522,C523,C528,C530,C531,C532,C533,C535,C537,C538,C541,C549,C550,C551,C552,C553,C554,C559,C564,C565,C21,C26,C333,C624,R25
45	2CC1-10-X7R500-472K	Multi-layer chip capacitor	MURATA,GRM155R71H472KA01D,4.7,nF,±10%,50V,0402,X7R	1	C527

46	2CC1-10-X7R500-682K	Multi-layer chip capacitor	MURATA,GRM155R71H682KA88D,6.8,nF,±10%,50V,0402,X7R	2	C55,R30
47	2CC1-16-C0G500-120J	Multi-layer chip capacitor	murata,GRM1885C1H120JA01D,12,pF,±5%,50V,1608,C0G	2	C142,C534
48	2CC1-16-C0G500-151J	Multi-layer chip capacitor	murata,GRM1885C1H151JA01D,150,pF,±5%,50V,1608,C0G	1	C145
49	2CC1-16-C0G500-160J	Multi-layer chip capacitor	murata,GRM1885C1H160JA01D,16,pF,±5%,50V,1608,C0G	1	C514
50	2CC1-16-C0G500-180J	Multi-layer chip capacitor	murata,GRM1885C1H180JA01D,18,pF,±5%,50V,1608,C0G	1	C516
51	2CC1-16-C0G500-220J	Multi-layer chip capacitor	murata,GRM1885C1H220JA01D,22,pF,±5%,50V,1608,C0G	1	C515
52	2CC1-16-C0G500-300J	Multi-layer chip capacitor	murata,GRM1885C1H300JA01D,30,pF,±5%,50V,1608,C0G	2	C140,C144
53	2CC1-16-C0G500-5R0C	Multi-layer chip capacitor	murata,GRM1885C1H5R0CA01D,5,pF,±0.25pF,50V,1608,C0G	1	C505
54	2CC1-16-C0G500-7R0C	Multi-layer chip capacitor	murata,GRM1885C1H7R0CA01D,7,pF,±0.25pF,50V,1608,C0G	1	C139
55	2CC1-16-C0G500-820J	Multi-layer chip capacitor	murata,GRM1885C1H820JA01D,82,pF,±5%,50V,1608,C0G	1	C511
56	2CC1-16-C0G500-8R0C	Multi-layer chip capacitor	murata,GRM1885C1H8R0BZ01D,8,pF,±0.25pF,50V,1608,C0G	1	C513

57	2CC1-16-C0G500-9R0C	Multi-layer chip capacitor	murata,GRM1885C1H9R0CA01D,9pF,±0.25pF,50V,1608,C0G	1	C503
58	2CC1-16-X7R500-471K	Multi-layer chip capacitor	murata,GRM188R71H471KA01D,470,pF,±10%,50V,1608,X7R	2	L6,L520
59	2CC1-20-X7R6R3-475K	Multi-layer chip capacitor	murata,GRM219R6J475KE19D,4.7,uF,±10%,6.3V,2012,X7R	3	C50,C51,C617
60	2CC1-20-Y5V160-106Z	Multi-layer chip capacitor	murata,GRM21BF51C106ZE15L,10,uF,+80%/-20%,16V,2012,Y5V	14	C10,C11,C103,C108,C119,C121,C123,C136,C20,C106,C582,C25,C606,C615
61	2LG1-VLS3012ET-100M	SMD power inductor	TDK,VLS3012ET-100M,10,uH,±20%,3*3*1.2	1	L107
62	2LH1-R301R5-L05-05	SMD air core inductor	E20.3*1.5*5TR	2	L72,L503
63	2LH1-R301R5-L06-05	SMD air core inductor	E20.3*1.5*6TR	2	L501,L502
64	2LH1-R301R5-R07-05	SMD air core inductor	E20.3*1.5*7TL	1	L505
65	2LH1-R401R5-R03-05	SMD air core inductor	E20.40*1.5*3TL	2	L71,L73
66	2LH1-R401R5-R08-05	SMD air core inductor	E20.40*1.5*8TL	1	L507
67	2LL1-16-27NJB	Multi-layer chip inductor	SunLord,SDCL1608C27NJTDF,27,nH,±5%,1608	1	L510

68	2LL1-16-2N7SA	Multi-layer chip inductor	SunLord,SDCL1608C2N7STDF,2.7,nH,±2%,1608	1	L504
69	2LL1-16-R10KA	Multi-layer chip inductor	SunLord,SDFL1608LR10KTFB02,0.1,uH,±10%,1608	2	L509,L511
70	2LW1-16UC-470J	SMD wire wound inductor	sagami,C1608CB-47NJ,47,nH,±5%,1608	2	L3,L69
71	2LW1-20UC-102J	SMD wire wound inductor	sagami,C2012C-1R0J,1,uH,±5%,2012	1	L508
72	2LW1-25UC-102JA	SMD wire wound inductor	2520,1μH±5%,ceramic core (FHW1008UC1R0J)	1	L506
73	2RE1-10-1003	SMD precision resistor	1005,100K±1%	2	R105,R107
74	2RE1-10-1602	SMD precision resistor	YAGEO,RC0402FR-0716K2L,16.2,KΩ,±1%,0402	1	R106
75	2RE1-10-6802	SMD precision resistor	yageo,RC0402FR-0768KL,68,KΩ,±1%,0402	1	R104
76	2RE1-16-1003	SMD precision resistor	yageo,RC0603FR-07100KL,100,KΩ,±1%,0603	2	R527,R528
77	2RE1-16-1503	SMD precision resistor	yageo,RC0603FR-07150KL,150,KΩ,±1%,0603	2	R518,R525
78	2RE1-16-2203	SMD precision resistor	yageo,RC0603FR-07220KL,220,KΩ,±1%,0603	1	R42

79	2RS1-10-000O	Chip resistor	yageo,RC0402JR-070RL,0,Ω,±5%,0402	29	C32,R102,R109,R71,R72,R167,R11,R26,R251,R252,C28,C560,C569,C577,R17,R516,R555,C19,C27,C45,R1,R15,R32,R41,R43,R624,IC301(pin2-3),R21,R75
80	2RS1-10-100J	Chip resistor	yageo,RC0402JR-0710RL,10,Ω,±5%,0402	3	R66,R244,R559
81	2RS1-10-101J	Chip resistor	yageo,RC0402JR-07100RL,100,Ω,±5%,0402	1	R36
82	2RS1-10-102J	Chip resistor	yageo,RC0402JR-071KL,1KΩ,±5%,0402	18	R108,R60,R236,R237,R238,R239,R3,R6,R10,R502,R539,R544,R545,R547,R551,R623,R340,R45
83	2RS1-10-103J	Chip resistor	yageo,RC0402JR-0710KL,10,KΩ,±5%,0402	15	R103,R110,R13,R40,R52,R53,R57,R58,R59,R68,R70,R245,R601,R614,R617
84	2RS1-10-104J	Chip resistor	yageo,RC0402JR-07100KL,100,KΩ,±5%,0402	2	R63,R526
85	2RS1-10-152J	Chip resistor	yageo,RC0402JR-071K5L,1.5,KΩ,±5%,0402	1	R507
86	2RS1-10-153J	Chip resistor	yageo,RC0402JR-0715KL,15,KΩ,±5%,0402	2	R512,R542
87	2RS1-10-155J	Chip resistor	yageo,RC0402JR-071M5L,1.5,MΩ,±5%,0402	1	C109
88	2RS1-10-182J	Chip resistor	yageo,RC0402JR-071K8L,1.8,KΩ,±5%,0402	1	R618

89	2RS1-10-203J	Chip resistor	yageo,RC0402JR-0720KL,20,KΩ,±5%,0402	4	C4,R529,C54,C73
90	2RS1-10-220J	Chip resistor	yageo,RC0402JR-0722RL,22,Ω,±5%,0402	2	R73,R511
91	2RS1-10-221J	Chip resistor	yageo,RC0402JR-07220RL,220,Ω,±5%,0402	2	R249,R250
92	2RS1-10-222J	Chip resistor	yageo,RC0402JR-072K2L,2.2,KΩ,±5%,0402	2	R246,R247
93	2RS1-10-223J	Chip resistor	yageo,RC0402JR-0722KL,22,KΩ,±5%,0402	2	R27,C34
94	2RS1-10-271J	Chip resistor	yageo,RC0402JR-07270RL,270,Ω,±5%,0402	1	R505
95	2RS1-10-302J	Chip resistor	yageo,RC0402JR-073KL,3,KΩ,±5%,0402	1	R22
96	2RS1-10-330J	Chip resistor	yageo,RC0402JR-0733RL,33,Ω,±5%,0402	1	R510
97	2RS1-10-333J	Chip resistor	yageo,RC0402JR-0733KL,33,KΩ,±5%,0402	6	R65,R67,C611,R18,R31,R616
98	2RS1-10-392J	Chip resistor	yageo,RC0402JR-073K9L,3.9,KΩ,±5%,0402	1	R632
99	2RS1-10-393J	Chip resistor	yageo,RC0402JR-0739KL,39,KΩ,±5%,0402	1	R631

100	2RS1-10-470J	Chip resistor	yageo,RC0402JR-0747RL,47,Ω,±5%,0402	1	R500
101	2RS1-10-471J	Chip resistor	yageo,RC0402JR-07470RL,470,Ω,±5%,0402	4	R14,R612,R615,R622
102	2RS1-10-472J	Chip resistor	yageo,RC0402JR-074K7L,4.7,KΩ,±5%,0402	3	R39,R561,R562
103	2RS1-10-473J	Chip resistor	yageo,RC0402JR-0747KL,47,KΩ,±5%,0402	15	R4,R227,R240,R241,R242,R243,R501,R508,R513,R540,R541,R557,R558,R61,R62
104	2RS1-10-474J	Chip resistor	yageo,RC0402JR-07470KL,470,KΩ,±5%,0402	2	C74,R83
105	2RS1-10-4R7J	Chip resistor	yageo,RC0402JR-074R7L,4.7,Ω,±5%,0402	2	R84,R85
106	2RS1-10-511J	Chip resistor	yageo,RC0402JR-07510RL,510,Ω,±5%,0402	1	C44
107	2RS1-10-561J	Chip resistor	yageo,RC0402JR-07560RL,560,Ω,±5%,0402	1	C578
108	2RS1-10-562J	Chip resistor	yageo,RC0402JR-075K6L,5.6,KΩ,±5%,0402	1	R613
109	2RS1-10-563J	Chip resistor	yageo,RC0402JR-0756KL,56,KΩ,±5%,0402	2	R509,R38
110	2RS1-10-564J	Chip resistor	yageo,RC0402JR-07560KL,560,KΩ,±5%,1005	1	R29

111	2RS1-10-682J	Chip resistor	yageo,RC0402JR-076K8L,6.8,KΩ,±5%,1005	1	R503
112	2RS1-10-821J	Chip resistor	yageo,RC0402JR-07820RL,820,Ω,±5%,1005	1	R37
113	2RS1-16-000O	Chip resistor	yageo,RC0603JR-070RL,0,Ω,±5%,1608	12	L100,L29,L30,L47,L48,L33,R9,R519,R44,R46,R602,R610
114	2RS1-16-225J	Chip resistor	yageo,RC0603JR-072M2L,2.2,MΩ,±5%,1608	1	R517
115	2RS1-16-271J	Chip resistor	yageo,RC0603JR-07270RL,270,Ω,±5%,1608	1	R515
116	2RS1-16-333J	Chip resistor	yageo,RC0603JR-0733KL,33,KΩ,±5%,1608	1	R8
117	2RS1-16-560J	Chip resistor	yageo,RC0603JR-0756RL,56,Ω,±5%,1608	1	L513
118	2RS1-20-000O	Chip resistor	yageo,RC0805JR-070RL,0,Ω,±5%,2012	2	C64,C605
119	2RS1-32-R39J	Chip resistor	yageo,RC1206JR-070R39L,0.39,Ω,±5%,3216	4	R520,R521,R522,R523
120	3FW1-0805L035	Fuse	Littelfuse,0805L035,0603,-40 to +85℃,CCC certified explosion protection	1	F101
121	3FW1-42932-302320	SMD fuse	littelfuse,429003/433003/466003,3216,3A/32V,CCC certified explosion	1	F100

			protection		
122	4PE1-16-F2	EVERLIGHT	EVERLIGHT,19-21SURC/S530-A2/TR8,0603,-40~85°C	1	D203
123	4PE1-16-F5	EVERLIGHT	EVERLIGHT,H19-213SYGC,0603,-40~85°C	1	D205
124	5FE1-BLM11A601S	SMD EMI filter	murata,BLM18AG601SN1D,1608.0	43	L70,L104,L105,L8,L9,L10,L11,L12,L13,L14,L18,L31,L34,L35,L36,L37,L38,L39,L40,L41,L42,L43,L44,L51,L52,L53,L54,L55,L56,L57,L58,L59,L60,L62,L63,L64,L67,L68,L300,L515,L521,L32,L600
125	5FE1-BLM21P300S	SMD EMI filter	murata,BLM21PG300SN1D,2012.0	2	L512,L514
126	5OT1-12R8-HHL-0303	Voltage controlled temperature compensated crystal oscillator	DSA321SCL,3.0V,12.8MHz±2.5ppm,-30℃~+75℃,3225	1	X500
127	61SL000007	HS8861 module (software burning suite)	HK MODULE UPGRADING SOFTWARE	1	IC1
128	6PM7-4169-HMF	Main board (U/V band)	47.6*100.7,1.0,4.0,1.0,immersion gold,CCC certified explosion protection	1	PCB
129	7MDC-4207-04A-W	Power shield cover	Copper-Nickel-Zinc alloy, 0.2 mm thick, square, 16.2*15.1*2.3	1	P1

130	112C03000273	Ceramic capacitor	YAGEO,CC0603JRNPO9BN680,68pF,±5%,50V,0603,NPO	1	C141
131	112C03000367	Ceramic capacitor	CC0603KRX7R9BB102,1nF,±10%,50V,1608,X7R	6	C29,C42,C48,C52,C53,C60
132	112C03000143	Ceramic capacitor	YAGEO,CC0603JRNPO9BN110,11pF,±5%,50V,0603,NPO	1	C504
133	121I05000076	SMT IC	AT1846S, lead free	1	U500
134	9FSC0100001	Hardware version	F	1	
135	133C07000002	Earphone jack	3.5mm, 4-pin, with switch, lead free	1	
136	2RW3-RP08110SNJX-V01	Volume knob	RP08110SNJX-V01-0001,with location column,lead free	1	
137	3CE3-CZ25-D	Earphone jack	2.5mm earphone,PJ-208B,4.5mm high,2.5mm long pin,lead free	1	
138	3SE3-RE08220HX-V02	Encoder switch	4.75mm axis,M6 thread,RE08220HX-V02-0000, lead free	1	
139	4SM7-6027-A40B	Microphone for handheld two-way radio	EM6027MP2.8-C,-20~60°C	1	
140	7MHJ-4169-02A-W	Conductive cloth	14*1.2*0.34	1	
141	7MHJ-8088-01A-W	Single-compone	8088.0,250mL/pc	3	

		nt epoxy glue			
142	7MHP-1010-15A-W	Microphone pad	PVC, transparent	1	
143	7MHP-4229-01A-W	Battery connector	Beryllium copper	1	
144	7MIC-4038-01B-WC	Earphone-jack pad	For 3.5mm earphone	1	

Table 3 Material List of Main Board (136~174 MHz)

SN	Material Code	Material Name	Specification	QTY	Position
1	133C07000002	Earphone jack	3.5mm, 4-pin, with switch, lead free	1	
2	2RW3-RP08110SNJX-V01	Volume knob	RP08110SNJX-V01-0001, with location column,lead free	1	
3	3CE3-CZ25-D	Earphone jack	2.5mm earphone,PJ-208B,4.5mm high,2.5mm long pin,lead free	1	
4	3SE3-RE08220HX-V02	Encoder switch	4.75mm axis,M6 thread,RE08220HX-V02-0000, lead free	1	
5	4SM7-6027-A40B	Microphone for handheld two-way radio	EM6027MP2.8-C,-20~60°C	1	

6	7MHJ-4169-02A-W	Conductive cloth	14*1.2*0.34	1	
7	7MHJ-8088-01A-W	Single-component epoxy glue	8088.0,250mL/pc	3	
8	7MHP-1010-15A-W	Microphone pad	PVC, transparent	1	
9	7MHP-4229-01A-W	Battery connector	Beryllium copper	1	
10	7MIC-4038-01B-WC	Earphone-jack pad	For 3.5mm earphone	1	
11	1DR1-1SR154-400	SMD rectifier diode	rohm,1SR154-400,4.5mm*2.6mm*2.0mm,-55℃ to 150℃	1	D100
12	1DR1-ESD9B5	TVS diode	ESD9B5.0ST5G,5V,SOD923,lead free	2	D18,D19
13	1DR1-NSR1020MW2T1G	SMD Schottky barrier diode	ON Semiconductor,NSR1020MW2T1G,SOD-323,2.7*1.35*1.0mm	1	D101
14	1DS1-1SS390	SMD switch diode	ROHM,1SS390,1.6mm*0.8mm*0.6mm,-55℃ to 125℃	2	D502,D503
15	1DS1-RN142S	SMD switch diode	ROHM,RN142S,1.6mm*0.8mm*0.6mm,-55℃ to 150℃	2	D500,D501

16	1ID1-MXD2020ML	SMD universal logic IC (accelerometer)	memsic,MXD2020ML,LCC-8,5.0mm*5.0mm*1.99mm,-40℃ to 105℃	1	U4
17	1IL1-NJM2904V	SMD linear IC	JRC,NJM2904V,SSOP-8,-40℃ to 85℃	2	IC500,IC302
18	1IS1-AT1846SD	AT1846SD single-chip transceiver	320MHZ-400HZ	1	U500
19	1IS1-MCP4802-A	D/A converter IC	MICROCHIP,MCP4802	1	U20
20	1IS1-MP2359	SMD switch power supply IC	MPS,MP2359,TSOT23-6,-40 to +85℃	1	IC102
21	1IS1-TDA2822	SMD IC	UTC,TDA2822,SOP8,-20 to +85℃	1	U600
22	1IS1-XC6204B502MR	SMD voltage regulator IC	XC6204B502MR,SOT-25,-40~85°	1	IC100
23	1TC1-UMC4	SMD Darlington tube	Rohm,UMC4N,UMT5,-~150℃	1	U301
24	1TF1-RD01MUS2-501	SMD field effect transistor (for portable digital and analog radios)	MITSUBISHI,RD01MUS2-501,S0T-89,-~150℃	1	Q501
25	1TF1-RD07MUS2B-501	SMD field effect transistor	MITSUBISHI,RD07MUS2B-501,SLP,-~150℃	1	Q500

26	1TF1-SSM3K15AFS	SMD field effect transistor	TOSHIBA,SSM3K15AFS,2-2H1B,-~150℃	2	Q6,Q704
27	1TF1-ST2301	SMD field effect transistor	ST2301,SOT-23-3L,-~150℃	3	Q102,Q20,Q600
28	1TT1-2SA1586	SMD transistor	TOSHIBA,2SA1586,SC-70,-~125℃	1	Q605
29	1TT1-2SC4116-GR	SMD transistor	TOSHIBA,2SC4116-GR,SOT-323/SC-70,-~125℃	1	Q2
30	1TT1-2SC5108-Y	R SMD transistor	TOSHIBA,2SC5108-Y,2-2H1A,-~125℃	1	Q502
31	1TT1-DTC144EE	SMD transistor	ROHM,DTC144EE,EMT3,-~150℃	8	Q103,Q200,Q201,Q4,Q7,Q10,Q606,Q707
32	1TT1-L2SC3356LT1	SMD transistor	LRC,L2SC3356LT1,SOT-23,-~150℃	1	Q503
33	2CC1-10-C0G500-100D	Multi-layer chip capacitor	MURATA,GRM1555C1H100JA01D,10,pF,±5%,50V,0402,C0G	1	C35
34	2CC1-10-C0G500-101J	Multi-layer chip capacitor	MURATA,GRM1555C1H101JA01D,100,pF,±5%,50V,0402,C0G	2	C24,C512
35	2CC1-10-C0G500-330J	Multi-layer chip capacitor	MURATA,GRM1555C1H330JA01D,33,pF,±5%,50V,0402,C0G	1	C521
36	2CC1-10-C0G500-470J	Multi-layer chip capacitor	MURATA,GRM1555C1H470JA01D,47,pF,±5%,50V,0402,C0G	2	C558,C560
37	2CC1-10-C0G500-680J	Multi-layer chip capacitor	MURATA,GRM1555C1H680JA01D,68,pF,±5%,50V,0402,C0G	1	C518

38	2CC1-10-C0G500-6R0C	Multi-layer chip capacitor	MURATA,GRM1555C1H6R0CA01D,6,pF,±0.25pF,50V,0402,C0G	2	C520,C561
39	2CC1-10-X7R100-105K	Multi-layer chip capacitor	1005,1μF±10%,10V,X7R	1	R607
40	2CC1-16-C0G500-3R0C	Multi-layer chip capacitor	murata,GRM1885C1H3R0CA01D,3,pF,±0.25pF,50V,1608,C0G	1	C505
41	2CC1-10-X7R160-104K	Multi-layer chip capacitor	MURATA,GRM155R71C104KA88D,100,nF,±10%,16V,0402,X7R	16	C101,C111,C114,C117,C13,C18,C346,C56,C15,C16,C22,C33,C43,C61,C604,C609
42	2CC1-10-X7R160-333K	Multi-layer chip capacitor	MURATA,GRM155R71C333KA01D,33,nF,±10%,16V,0402,X7R	3	C47,R12,C583
43	2CC1-10-X7R160-473K	Multi-layer chip capacitor	MURATA,GRM155R71C473KA01D,47,nF,±10%,16V,0402,X7R	1	C40
44	2CC1-10-X7R160-683K	Multi-layer chip capacitor	MURATA,GRM155R71C683KA88D,68,nF,±10%,16V,0402,X7R	1	C23
45	2CC1-10-X7R250-223K	Multi-layer chip capacitor	MURATA,GRM155R71E223KA61D,22,nF,±10%,25V,0402,X7R	1	C584
46	2CC1-10-X7R500-102K	Multi-layer chip capacitor	MURATA,GRM155R71H102KA01D,1,nF,±10%,50V,0402,X7R	37	C120,C124,C39,C65,C66,C67,C68,C69,C71,C76,C77,C78,C79,C80,C81,C82,C83,C85,C94,C96,C97,C98,C99,C100,C107,C125,C126,C127,C128,C129,C130,C133,C526,C536,C573,C581,R20
47	2CC1-10-X7R500-103K	Multi-layer chip capacitor	MURATA,GRM155R71H103KA88D,10,nF,±10%,50V,0402,X7R	15	C110,C112,C115,C12,C17,C57,C58,C221,C222,C529,C539,C540,C49,C62,C612

48	2CC1-10-X7R500-153K	Multi-layer chip capacitor	MURATA,GRM155R71H153KA12D,15,nF,±10%,50V,0402,X7R	2	C547,C545
49	2CC1-10-X7R500-182K	Multi-layer chip capacitor	MURATA,GRM155R71H182KA01D,1.8,nF,±10%,50V,0402,X7R	1	C31
50	2CC1-10-X7R500-222K	Multi-layer chip capacitor	MURATA,GRM155R71H222KA01D,2.2,nF,±10%,50V,0402,X7R	1	C340
51	2CC1-10-X7R500-271K	Multi-layer chip capacitor	MURATA,GRM155R71H271KA01D,270,pF,±10%,50V,0402,X7R	1	C36
52	2CC1-10-X7R500-471K	Multi-layer chip capacitor	murata,GRM155R71H471KA01D,470,pF,±10%,50V,1005,X7R	38	C102,C104,C113,C118,C122,C6,C14,C230,C231,C232,C233,C332,C519,C522,C523,C528,C530,C531,C532,C533,C535,C537,C538,C541,C549,C550,C551,C552,C553,C554,C559,C564,C565,C21,C26,C333,C624,R25
53	2CC1-10-X7R500-472K	Multi-layer chip capacitor	MURATA,GRM155R71H472KA01D,4.7,nF,±10%,50V,0402,X7R	1	C527
54	2CC1-10-X7R500-682K	Multi-layer chip capacitor	MURATA,GRM155R71H682KA88D,6.8,nF,±10%,50V,0402,X7R	2	C55,R30
55	2CC1-10-Y5V160-105Z	Multi-layer chip capacitor	murata,GRM155R61C105KA12D,1,uF,+80%/-20%,16V,1005,Y5V	2	C95,C59
56	2CC1-16-C0G500-100D	Multi-layer chip capacitor	murata,GRM1885C1H100JA01D,10,pF,±0.5pF,50V,1608,C0G	1	C507
57	2CC1-16-C0G500-121J	Multi-layer chip capacitor	murata,GRM1885C1H121JA01D,120,pF,±5%,50V,1608,C0G	1	C511

58	2CC1-16-C0G500-150J	Multi-layer chip capacitor	murata,GRM1885C1H150JA01D,15,pF,±5%,50V,1608,C0G	1	C509
59	2CC1-16-C0G500-200J	Multi-layer chip capacitor	murata,GRM1885C1H200JA01D,20,pF,±5%,50V,1608,C0G	1	C508
60	2CC1-16-C0G500-220J	Multi-layer chip capacitor	murata,GRM1885C1H220JA01D,22,pF,±5%,50V,1608,C0G	1	C502
61	2CC1-16-C0G500-2R0C	Multi-layer chip capacitor	murata,GRM1885C1H2R0CA01D,2,pF,±0.25pF,50V,1608,C0G	2	C514,C503
62	2CC1-16-C0G500-4R0C	Multi-layer chip capacitor	murata,GRM1885C1H4R0CA01D,4,pF,±0.25pF,50V,1608,C0G	2	C516,C501
63	2CC1-16-C0G500-5R0C	Multi-layer chip capacitor	murata,GRM1885C1H5R0CA01D,5,pF,±0.25pF,50V,1608,C0G	1	C513
64	2CC1-16-C0G500-6R0C	Multi-layer chip capacitor	murata,GRM1885C1H6R0CA01D,6,pF,±0.25pF,50V,1608,C0G	1	C515
65	2CC1-16-X7R500-471K	Multi-layer chip capacitor	murata,GRM188R71H471KA01D,470,pF,±10%,50V,1608,X7R	1	L520
66	2CC1-20-X7R6R3-475K	Multi-layer chip capacitor	murata,GRM219R6J475KE19D,4.7,uF,±10%,6.3V,2012,X7R	3	C50,C51,C617
67	2CC1-20-Y5V160-106Z	Multi-layer chip capacitor	murata,GRM21BF51C106ZE15L,10,uF,+80%/-20%,16V,2012,Y5V	14	C10,C11,C103,C108,C119,C121,C123,C136,C20,C106,C582,C25,C606,C615
68	2LG1-VLS3012ET-100M	SMD power inductor	TDK,VLS3012ET-100M,10,uH,±20%,3*3*1.2	1	L107

69	2LH1-R401R5-R03-05	SMD air core inductor	E20.40*1.5*3TL	1	L500
70	2LH1-R401R5-R04-05	SMD air core inductor	E20.40*1.5*4TL	4	L502,L505,L501,L503
71	2LH1-R401R5-R08-05	SMD air core inductor	E20.40*1.5*8TL	1	L507
72	2LH1-R501R5-L05-05	SMD air core inductor	E20.50*1.5*5TR	1	L506
73	2LL1-16-22NJB	Multi-layer chip inductor	SunLord,SDCL1608C22NJTDF,22,nH,±5%,1608	2	L509,L511
74	2LL1-16-2N7SA	Multi-layer chip inductor	SunLord,SDCL1608C2N7STDF,2.7,nH,±2%,1608	1	L504
75	2LW1-16UC-270J	SMD wire wound inductor	sagami,C1608CB-27NJ,27,nH,±2%,1608	1	L6
76	2LW1-20UC-221J	SMD wire wound inductor	murata,LQW2BHNR22J03L,220,nH,±5%,2012	1	L508
77	2RE1-10-1003	SMD precision resistor	1005,100K±1%	2	R105,R107
78	2RE1-10-1602	SMD precision resistor	YAGEO,RC0402FR-0716K2L,16.2,KΩ,±1%,0402	1	R106
79	2RE1-10-6802	SMD precision resistor	yageo,RC0402FR-0768KL,68,KΩ,±1%,0402	1	R104

80	2RE1-16-1003	SMD precision resistor	yageo,RC0603FR-07100KL,100,KΩ,±1%,0603	2	R527,R528
81	2RE1-16-1503	SMD precision resistor	yageo,RC0603FR-07150KL,150,KΩ,±1%,0603	2	R518,R525
82	2RE1-16-2203	SMD precision resistor	yageo,RC0603FR-07220KL,220,KΩ,±1%,0603	1	R42
83	2RS1-10-000O	Chip resistor	yageo,RC0402JR-070RL,0,Ω,±5%,0402	30	C32,R102,R109,R71,R72,R167,R11,R26,R251,R252,C28,C569,C577,R17,R504,R516,R555,C19,C27,C45,R1,R15,R32,R41,R43,R75,R624,R22,R21,IC301(pin2-3)
84	2RS1-10-100J	Chip resistor	yageo,RC0402JR-0710RL,10,Ω,±5%,0402	3	R66,R244,R559
85	2RS1-10-101J	Chip resistor	yageo,RC0402JR-07100RL,100,Ω,±5%,0402	2	R36,R73
86	2RS1-10-102J	Chip resistor	yageo,RC0402JR-071KL,1KΩ,±5%,0402	18	R108,R60,R236,R237,R238,R239,R3,R6,R10,R502,R539,R544,R545,R547,R551,R623,R45,R340
87	2RS1-10-103J	Chip resistor	yageo,RC0402JR-0710KL,10,KΩ,±5%,0402	15	R103,R110,R13,R40,R52,R53,R57,R58,R59,R68,R70,R245,R601,R614,R617
88	2RS1-10-104J	Chip resistor	yageo,RC0402JR-07100KL,100,KΩ,±5%,0402	2	R63,R526
89	2RS1-10-152J	Chip resistor	yageo,RC0402JR-071K5L,1.5,KΩ,±5%,0402	1	R507

90	2RS1-10-153J	Chip resistor	yageo,RC0402JR-0715KL,15,KΩ,±5%,0402	2	R512,R542
91	2RS1-10-155J	Chip resistor	yageo,RC0402JR-071M5L,1.5,MΩ,±5%,0402	1	C109
92	2RS1-10-182J	Chip resistor	yageo,RC0402JR-071K8L,1.8,KΩ,±5%,0402	1	R618
93	2RS1-10-203J	Chip resistor	yageo,RC0402JR-0720KL,20,KΩ,±5%,0402	4	C4,R529,C54,C73
94	2RS1-10-220J	Chip resistor	yageo,RC0402JR-0722RL,22,Ω,±5%,0402	1	R511
95	2RS1-10-221J	Chip resistor	yageo,RC0402JR-07220RL,220,Ω,±5%,0402	2	R249,R250
96	2RS1-10-222J	Chip resistor	yageo,RC0402JR-072K2L,2.2,KΩ,±5%,0402	2	R246,R247
97	2RS1-10-223J	Chip resistor	yageo,RC0402JR-0722KL,22,KΩ,±5%,0402	2	R27,C34
98	2RS1-10-271J	Chip resistor	yageo,RC0402JR-07270RL,270,Ω,±5%,0402	1	R505
99	2RS1-10-330J	Chip resistor	yageo,RC0402JR-0733RL,33,Ω,±5%,0402	1	R510
100	2RS1-10-333J	Chip resistor	yageo,RC0402JR-0733KL,33,KΩ,±5%,0402	6	R65,R67,C611,R18,R31,R616

101	2RS1-10-392J	Chip resistor	yageo,RC0402JR-073K9L,3.9,KΩ,±5%,0402	1	R632
102	2RS1-10-393J	Chip resistor	yageo,RC0402JR-0739KL,39,KΩ,±5%,0402	1	R631
103	2RS1-10-470J	Chip resistor	yageo,RC0402JR-0747RL,47,Ω,±5%,0402	1	R500
104	2RS1-10-471J	Chip resistor	yageo,RC0402JR-07470RL,470,Ω,±5%,0402	4	R14,R612,R615,R622
105	2RS1-10-472J	Chip resistor	yageo,RC0402JR-074K7L,4.7,KΩ,±5%,0402	3	R39,R561,R562
106	2RS1-10-473J	Chip resistor	yageo,RC0402JR-0747KL,47,KΩ,±5%,0402	15	R4,R227,R240,R241,R242,R243,R501,R508,R513,R540,R541,R557,R558,R61,R62
107	2RS1-10-474J	Chip resistor	yageo,RC0402JR-07470KL,470,KΩ,±5%,0402	2	C74,R83
108	2RS1-10-4R7J	Chip resistor	yageo,RC0402JR-074R7L,4.7,Ω,±5%,0402	2	R84,R85
109	2RS1-10-511J	Chip resistor	yageo,RC0402JR-07510RL,510,Ω,±5%,0402	1	C44
110	2RS1-10-561J	Chip resistor	yageo,RC0402JR-07560RL,560,Ω,±5%,0402	1	C578
111	2RS1-10-562J	Chip resistor	yageo,RC0402JR-075K6L,5.6,KΩ,±5%,0402	1	R613

112	2RS1-10-563J	Chip resistor	yageo,RC0402JR-0756KL,56,KΩ,±5%,0402	2	R509,R38
113	2RS1-10-564J	Chip resistor	yageo,RC0402JR-07560KL,560,KΩ,±5%,1005	1	R29
114	2RS1-10-682J	Chip resistor	yageo,RC0402JR-076K8L,6.8,KΩ,±5%,1005	1	R503
115	2RS1-10-821J	Chip resistor	yageo,RC0402JR-07820RL,820,Ω,±5%,1005	1	R37
116	2RS1-16-000O	Chip resistor	yageo,RC0603JR-070RL,0,Ω,±5%,1608	14	L100,L29,L30,L47,L48,L3,L33,L510,R9,R519,R44,R46,R602,R610
117	2RS1-16-225J	Chip resistor	yageo,RC0603JR-072M2L,2.2,MΩ,±5%,1608	1	R517
118	2RS1-16-271J	Chip resistor	yageo,RC0603JR-07270RL,270,Ω,±5%,1608	1	R515
119	2RS1-16-560J	Chip resistor	yageo,RC0603JR-0756RL,56,Ω,±5%,1608	1	L513
120	2RS1-16-623J	Chip resistor	yageo,RC0603JR-0762KL,62,KΩ,±5%,1608	1	R8
121	2RS1-20-000O	Chip resistor	yageo,RC0805JR-070RL,0,Ω,±5%,2012	2	C64,C605
122	2RS1-32-R39J	Chip resistor	yageo,RC1206JR-070R39L,0.39,Ω,±5%,3216	4	R520,R521,R522,R523

123	3FW1-0805L035	Fuse	Littelfuse,0805L035,0603,-40 to +85℃,CCC certified explosion protection	1	F101
124	3FW1-42932-302320	SMD fuse	littelfuse,429003/433003/466003,3216,3A/32V,CCC certified explosion protection	1	F100
125	4PE1-16-F2	EVERLIGHT	EVERLIGHT,19-21SURC/S530-A2/TR8,0603,-40~85°C	1	D203
126	4PE1-16-F5	EVERLIGHT	EVERLIGHT,H19-213SYGC,0603,-40~85°C	1	D205
127	5FE1-BLM11A601S	SMD EMI filter	murata,BLM18AG601SN1D,1608.0	43	L70,L104,L105,L8,L9,L10,L11,L12,L13,L14,L18,L31,L34,L35,L36,L37,L38,L39,L40,L41,L42,L43,L44,L51,L52,L53,L54,L55,L56,L57,L58,L59,L60,L62,L63,L64,L67,L68,L300,L515,L521,L32,L600
128	5FE1-BLM21P300S	SMD EMI filter	murata,BLM21PG300SN1D,2012.0	2	L512,L514
129	5OT1-12R8-HHL-0303	Voltage controlled temperature compensated crystal oscillator	DSA321SCL,3.0V,12.8MHz±2.5ppm,-30℃~+75℃,3225	1	X500
130	61SL000007	HS8851 module (software burning suite)	HK MODULE +DP405W UPGRADING SOFTWARE	1	IC1
131	6PM7-4169-HMF	Main board (U/V	47.6*100.7,1.0,4.0,1.0,immersion	1	PCB

		band)	gold,CCC certified explosion protection		
132	7MDC-4207-04A-W	Power shield cover	Copper-Nickel-Zinc alloy, 0.2 mm thick, square, 16.2*15.1*2.3	1	P1
133	9FSX-LF-RMAF8F2	Solder paste	Lead free,HF-RD8F2,Sn96.5-Ag3.0-Cu0.5	729	
134	112C03000237	Ceramic capacitor	YAGEO,CC0603BRNPO9BN1R5,1.5 pF,±0.1pF,50V,0603,NPO	1	C504
135	112C03000273	Ceramic capacitor	YAGEO,CC0603JRNPO9BN680,68p F,±5%,50V,0603,NPO	1	C510
136	112C03000367	Ceramic capacitor	CC0603KRX7R9BB102,1nF,±10%,5 0V,1608,X7R	6	C29,C42,C48,C52,C53,C60
137	9FSC0100001	Hardware version	F	1	

Table 4 Material List of Module Board

SN	Material Code	Material Name	Specification	QTY	Position
1	136P04000009	Multi-layer PCB	DP405W_MODULE_V2.0,36.4X24.7,4-layer,1.0m m	1	PCB
2	1DR1-RB521S30	Schottky barrier diode	ROHM,RB521S30,SOD-523,1.6mm*0.8mm*0.6m m,-40℃ to 125℃	2	D1,D2
3	1IS1-HS8851	MCU + baseband	HS8851;175;BGA;7.8X7.8;040;BB	1	U2100

		processing IC			
4	1IS1-LN1121P332MR	SMD voltage regulator IC	Natlinear,LN1121P332MR,SOT23-3,-40 to +85℃	3	U1,U3,U4
5	2CC1-10-C0G500-101J	Multi-layer chip capacitor	MURATA,GRM1555C1H101JA01D,100,pF,±5%,50V,0402,C0G	1	C13
6	2CC1-10-X7R160-104K	Multi-layer chip capacitor	MURATA,GRM155R71C104KA88D,100,nF,±10%,16V,0402,X7R	4	C8,C11,C12,R23
7	2CC1-10-X7R500-102K	Multi-layer chip capacitor	MURATA,GRM155R71H102KA01D,1,nF,±10%,50V,0402,X7R	6	C3,C10,C9,C15,C34,C36
8	2CC1-10-X7R500-103K	Multi-layer chip capacitor	MURATA,GRM155R71H103KA88D,10,nF,±10%,50V,0402,X7R	3	C2,C5,C16
9	2CC1-10-Y5V160-105Z	Multi-layer chip capacitor	murata,GRM155R61C105KA12D,1,uF,+80%/-20%,16V,1005,Y5V	21	C4,C7,C19,C20,C21,C23,C24,C25,C26,C27,C29,C30,C31,C32,C33,C35,C0044,C153,C154,C42,C43
10	2CC1-16-X5R160-105K	Multi-layer chip capacitor	murata,GRM188R61C105KA12D,1,uF,±10%,16V,1608,X5R	3	C28,C39,C40
11	2CC1-20-Y5V160-106Z	Multi-layer chip capacitor	murata,GRM21BF51C106ZE15L,10,uF,+80%/-20%,16V,2012,Y5V	5	C1,C17,C18,C37,C38
12	2RS1-10-000O	Chip resistor	yageo,RC0402JR-070RL,0,Ω,±5%,0402	2	R4,R68
13	2RS1-10-101J	Chip resistor	yageo,RC0402JR-07100RL,100,Ω,±5%,0402	3	R5,R6,R19
14	2RS1-10-102J	Chip resistor	yageo,RC0402JR-071KL,1KΩ,±5%,0402	4	C22,R3,R7,R8

15	2RS1-10-103J	Chip resistor	yageo,RC0402JR-0710KL,10,KΩ,±5%,0402	8	R1,R2,R11,R12,R15,R16,R17,R18
16	2RS1-10-330J	Chip resistor	yageo,RC0402JR-0733RL,33,Ω,±5%,0402	2	C6,C14
17	2RS1-10-511J	Chip resistor	yageo,RC0402JR-07510RL,510,Ω,±5%,0402	2	R13,R14
18	125O02000001	Voltage controlled crystal oscillator	2WN2600001 26MHz±2ppm,.VC-TCXO,2.4-3.3V,	1	X2

Appendix 3 Material List (Structural Section)

SN	Material Code	Material Name	Specification	QTY
1	3CR7-SMA-50JF-4	RF coaxial cable	SMA-J, install using flange	1
2	63BJ000002	KBJ-17,belt-clip assembly	Black, PC1414, weld-line problem solved, etched	1
3	6PD7-4038-HPC	PTT plate	38*9.3, Version C,0.4,dual-side, FR-4	1
4	6SS3-MK4169-HMA	Top housing assembly	Dual-color (black + gray),white glue coated	1
5	7MBM-S4002-A	Conductive foam	Dual-sided adhesive, 12*7*7mm	1
6	7MHJ-4169-01A-W	Dual-sided adhesive for PTT key	35*5*0.1 mm	1
7	7MHL-4141-01B-N	Aluminum housing	S8, ADC12, oiled jet	1
8	7MHP-4097-02A-W0	Waterproof pad for earphone jack	TPU, black, etched, lead free	1

9	7MHP-4141-04C-W0	Volume knob (cover die 1/replaced core)	ABS, black, etched	1
10	7MHP-4169-02B-W0	Top cover	PC1414, black, etched	1
11	7MHP-4169-05C-W0	PTT key	Plastic, PC365, black and orangish red	1
12	7MHP-7210-03C-W0	Coding knob (cover die 1)	ABS, black, external circlip, oiled pantone cool gray 6C,coarse textured	1
13	7MHR-1727-09A-W3	R 558 hand microphone case	Silica gel, orange color, hardness 40°	1
14	7MHR-4038-02A-W0	Master waterproof ring	Silica gel, high-light	1
15	7MHR-4038-04A-W0	Top waterproof pad	Silica gel, black, polished	1
16	7MHR-7042-06C-W0	Heat-conducting silicon pad	Silica gel, black, 3*6*9mm	1
17	7MHS-4038-02B-W	Dome array for PTT key	φ6mm,stainless steel,original color	1
18	7MHS-4072-08A-W	STP knob circlip	Stainless steel, T=0.3, original color	2
19	7MHZ-1731-01A-J5	Insulated paper for speaker	N/A	1
20	7NRC-060090035-W1	Coding nut	Material: brass	2
21	7NRC-4078-01A-N	Antenna connector nut	Brass, black nickel plated surface	1
22	7PLP-4229-V01A	Electrode sheet sticker	PVC,0.3mm thick,11*11,single-sided adhesive	1
23	7SMF-020040M-SZYB-N	Cross recessed mushroom-head machine screw	Hardened iron, Φ2mm*4 mm, nickel plated, metric coarse thread, nylok	8

24	7SMF-020080M-MHHT-N1	Torx thick-head machine screw	Hardened iron,Φ2mm*8mm, metric coarse thread, nylok	2
25	7SMF-025080M-SZYB-Z1	Cross recessed mushroom-head machine screw	Hardened iron; Φ2.5mm*8mm,black nickel plated, metric coarse thread	2

Appendix 4 Accessory List

Accessory	Quantity
Antenna	1
Belt Clip	1
Earphone Cover	1
Screw	1
Battery	1

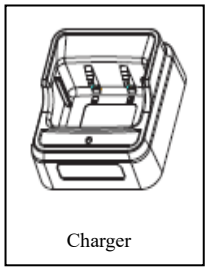
Charger

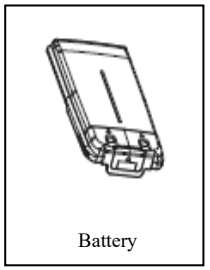
Battery


Belt Clip

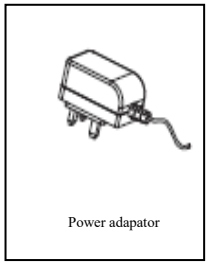
Power adapator

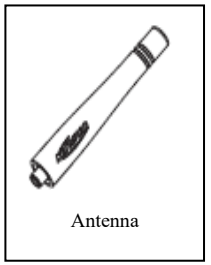
Antenna


Strap

Charger	1
Power Adaptor	1
User Guide	1
Warranty Card	1
Strap	1

Appendix 5 Schematic Diagrams and Layout Drawing

Schematic Diagrams of Main Board

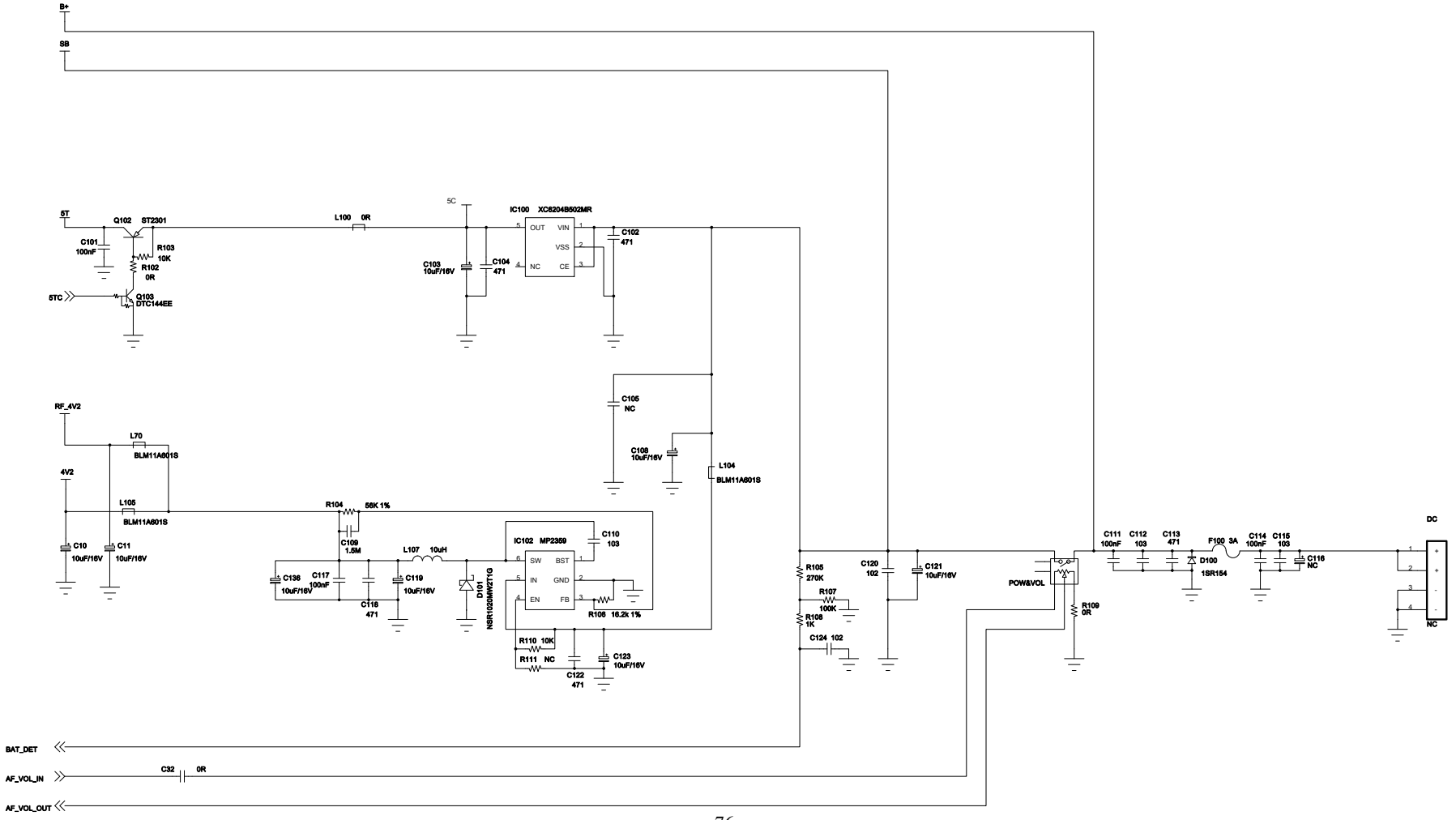

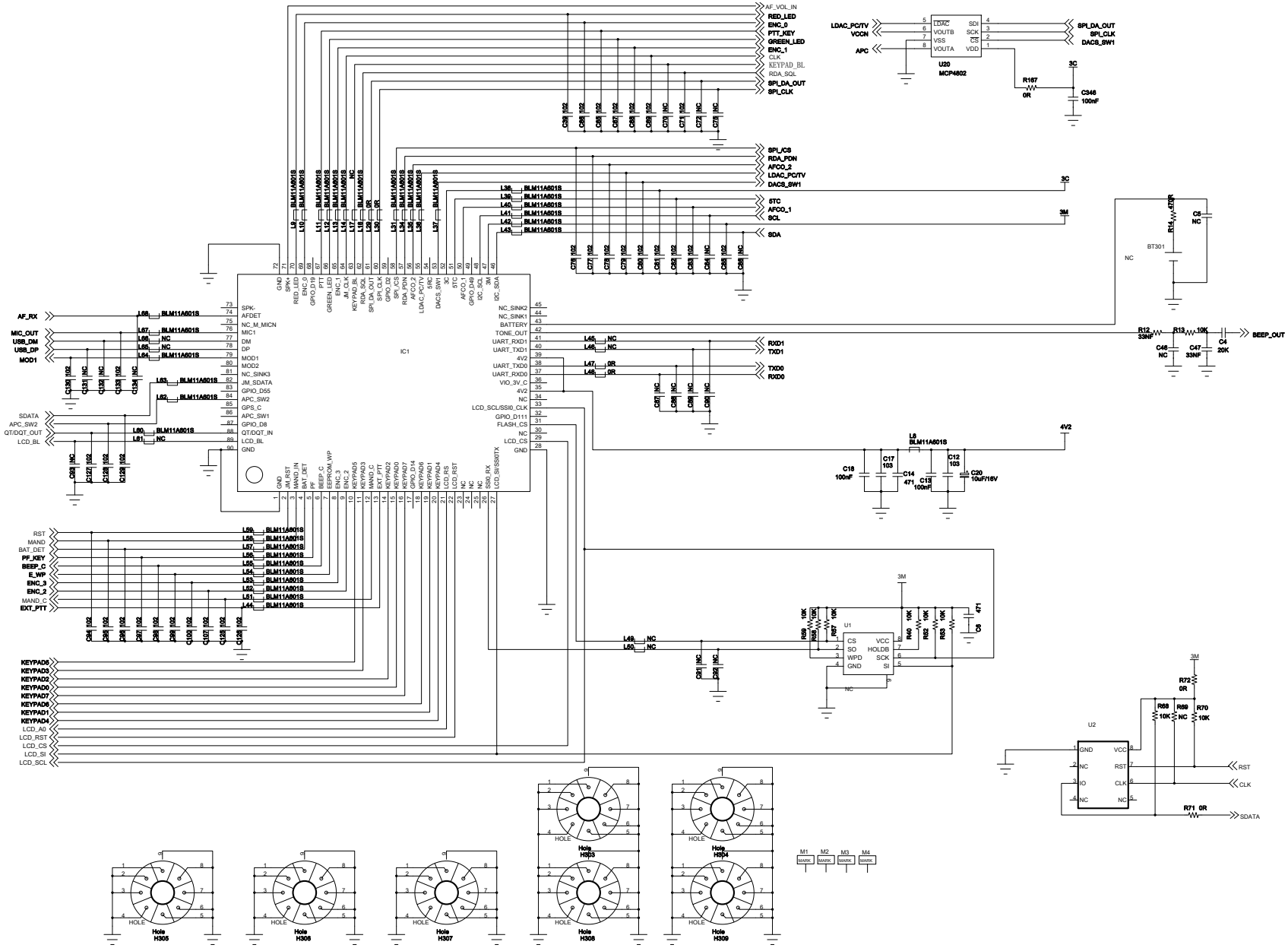
AF_VOL_IN
RED_LED
ENC_0
PTT_KEY
GREEN_LED
ENC_1
CLK
KEYPAD_BL
RDA_SQL
SPI_DA_OUT
SPI_CLK
SPI_CS
RDA_PDN
AFCO_2
LDAC_PC/TV
DACS_SW1
5TC
AFCO_1
SCL
SDA
LDAC_PC/TV
VCCN
APC
U20
MCP4802
SPI_DA_OUT
SPI_CLK
DACS_SW1
R167
0R
C346
100nF
IC1
AF_RX
MIC_OUT
USB_DM
USB_DP
MOD1
SDATA
APC_SW2
QT/DQT_OUT
LCD_BL
BEEP_OUT
RXD1
TXD1
TXD0
RXD0
4V2
RST
MAND
BAT_DET
PF_KEY
BEEP_C
E_WP
ENC_3
ENC_2
MAND_C
EXT_PTT
KEYPAD6
KEYPAD3
KEYPAD2
KEYPAD0
KEYPAD7
KEYPAD8
KEYPAD1
KEYPAD4
LCD_A0
LCD_RST
LCD_CS
LCD_SI
LCD_SCL
U1
U2
Hole H305
Hole H306
Hole H307
Hole H308
Hole H309
Hole H303
Hole H304

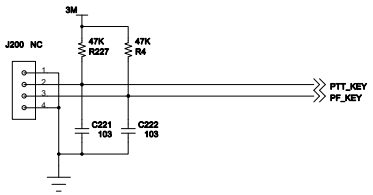
3M
J200 NC
47K R227
47K R4
C221 103
C222 103
PTT_KEY
PF_KEY

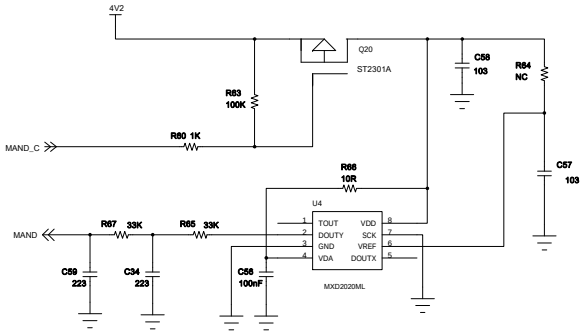
4V2
Q20
ST2301A
R83 100K
R80 1K
MAND_C
C58 103
R84 NC
C57 103
R66 10R
U4
MAND
R67 33K
R65 33K
C59 223
C34 223
C56 100nF
TOUT
DOUTY
GND
VDA
VDD
SCK
VREF
DOUTX
MXD2020ML

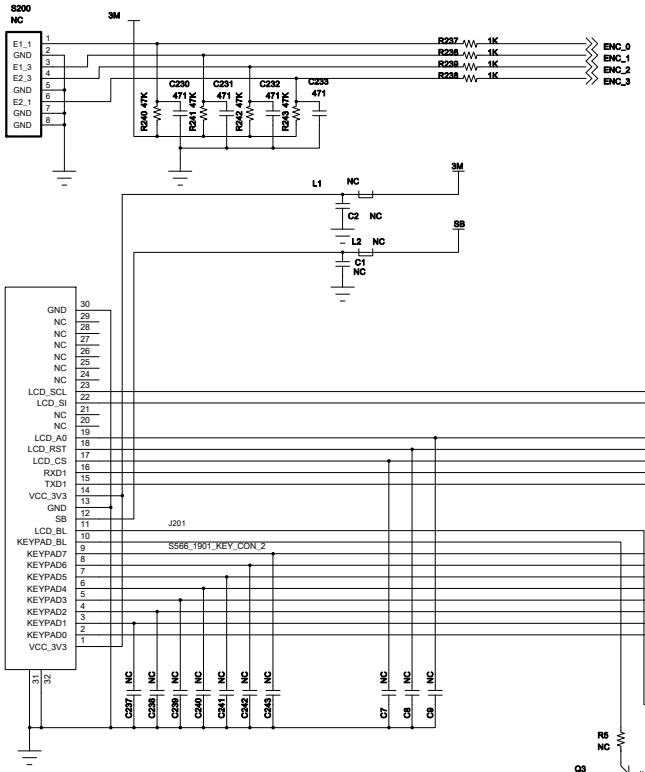
S200 NC
3M
E1_1
GND
E1_3
E2_3
GND
E2_1
GND
GND
R237 1K
R236 1K
R239 1K
R238 1K
ENC_0
ENC_1
ENC_2
ENC_3
C230 471
C231 471
C232 471
C233 471
R240 47K
R241 47K
R242 47K
R243 47K
L1 NC
C2 NC
L2 NC
C1 NC
SB
J201
S566_1901_KEY_CON_2
LCD_SCL
LCD_SI
LCD_A0
LCD_RST
LCD_CS
RXD1
TXD1
VCC_3V3
KEYPAD_BL
KEYPAD7
KEYPAD6
KEYPAD5
KEYPAD4
KEYPAD3
KEYPAD2
KEYPAD1
KEYPAD0
L15 NC
L16 NC
L19 NC
L20 NC
L21 NC
L22 NC
L23 NC
L24 NC
L25 NC
L26 NC
L27 NC
L28 NC
L7 NC
C257 NC
C236 NC
C239 NC
C240 NC
C241 NC
C242 NC
C245 NC
C7 NC
C8 NC
C9 NC
R5 NC
Q3
C30 NC
R2 NC
Q1
C3 NC
LCD_BL

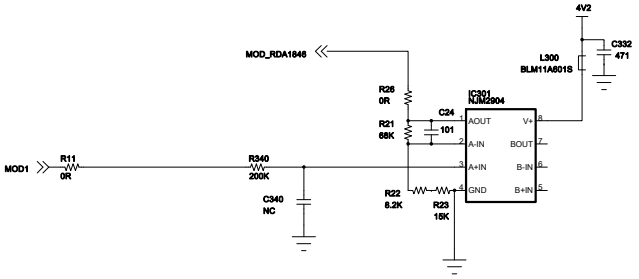
4V2
C332 471
L300 BLM11A601S
MOD_RDA1846
R26 0R
IC301 NJM2904
C24 101
R21 68K
AOUT
A-IN
A+IN
GND
V+
BOUT
B-IN
B+IN
MOD1
R11 0R
R340 200K
C340 NC
R22 8.2K
R23 15K

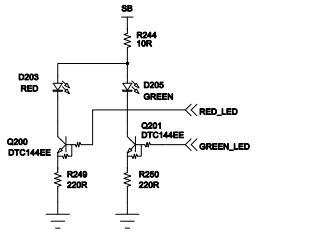
SB
R244 10R
D203 RED
D205 GREEN
RED_LED
Q201 DTC144EE
GREEN_LED
Q200 DTC144EE
R249 220R
R250 220R

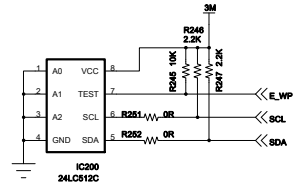
3M
R246 2.2K
R245 10K
R247 2.2K
A0
A1
A2
GND
VCC
TEST
SCL
SDA
E_WP
R251 0R
R252 0R
SCL
SDA
IC200 24LC512C

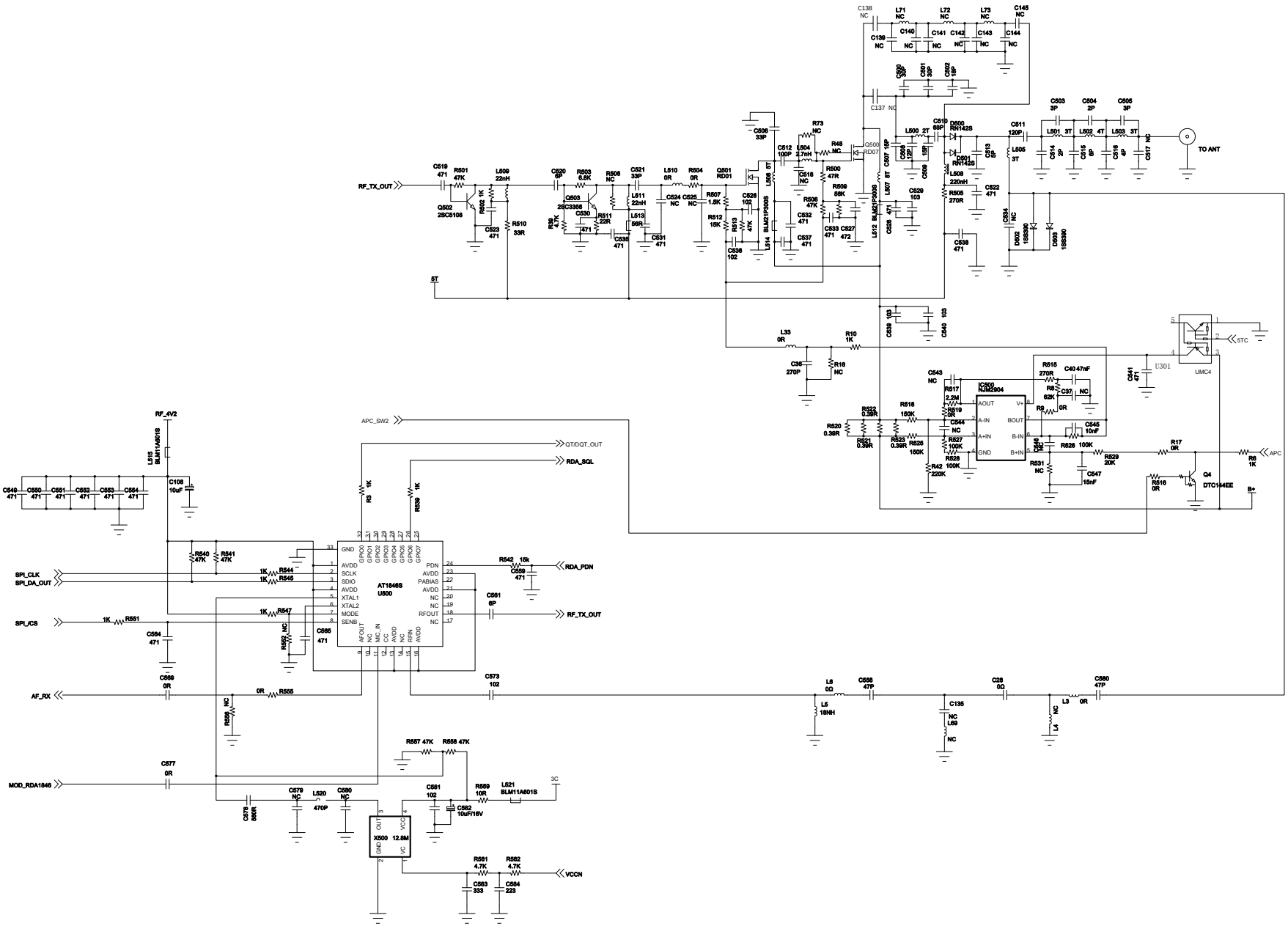
RF_TX_OUT
TO ANT
5T
5TC
UMC4
U301
APC
APC_SW2
QT/DQT_OUT
RDA_SQL
RF_4V2
SPI_CLK
SPI_DA_OUT
SPI_/CS
AF_RX
MOD_RDA1846
RDA_PDN
RF_TX_OUT
AT1846S
U500
X500
12.8M
VCCN
IC500
NJM2904
Q4
DTC144EE
B+

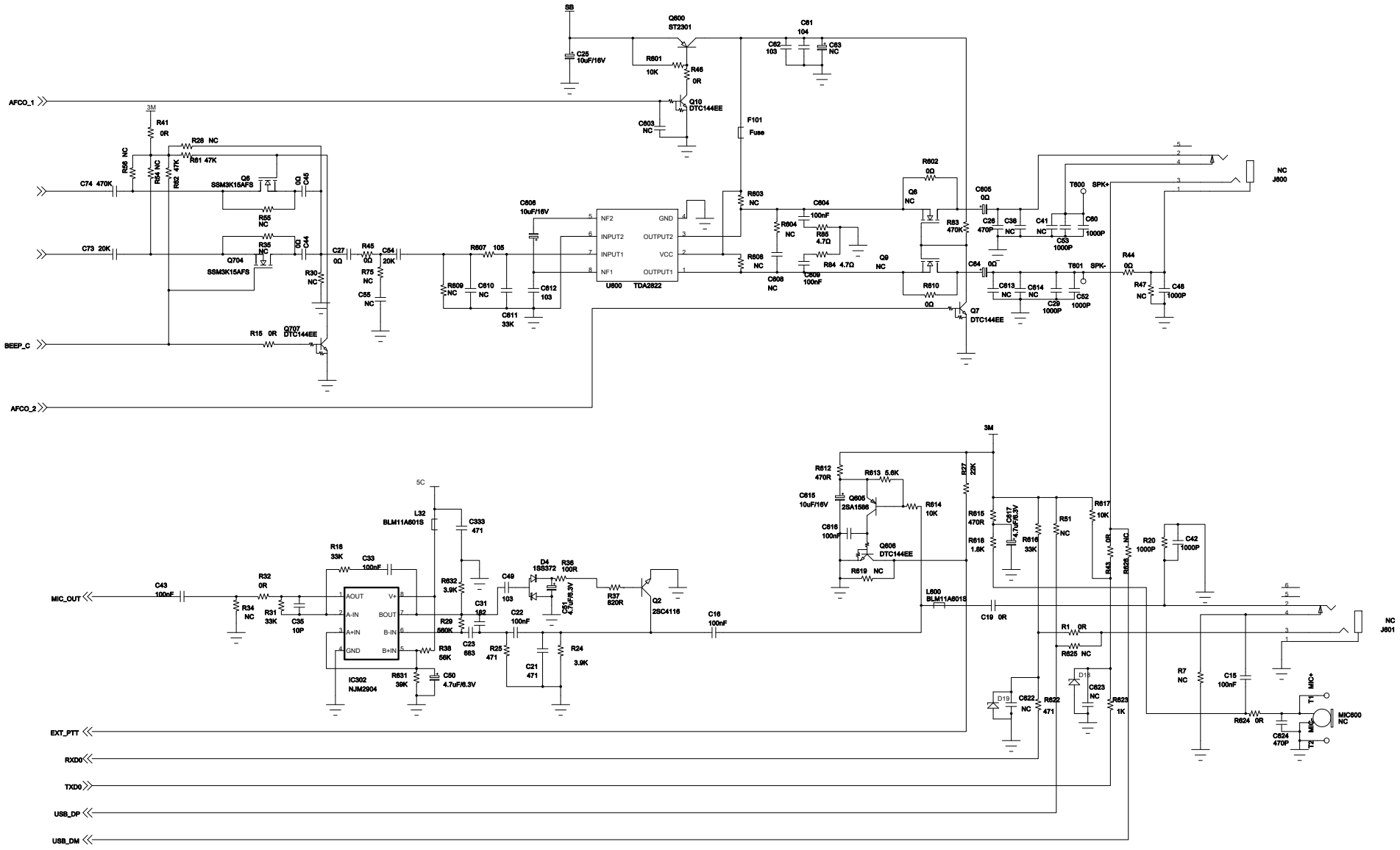
AFCO_1
BEEP_C
AFCO_2
MIC_OUT
EXT_PTT
RXD0
TXD0
USB_DP
USB_DM
U800 TDA2822
IC302 NJM2904
Q2 2SC4116
Q605 2SA1586
Q606 DTC144EE
Q10 DTC144EE
Q7 DTC144EE
Q707 DTC144EE
Q600 ST2301
SSM3K15AFS
F101 Fuse
L32 BLM11A601S
L600 BLM11A601S
MIC800
SPK+
SPK-
NC J600
NC J601

Top-Layer Layout Drawing of Main Board

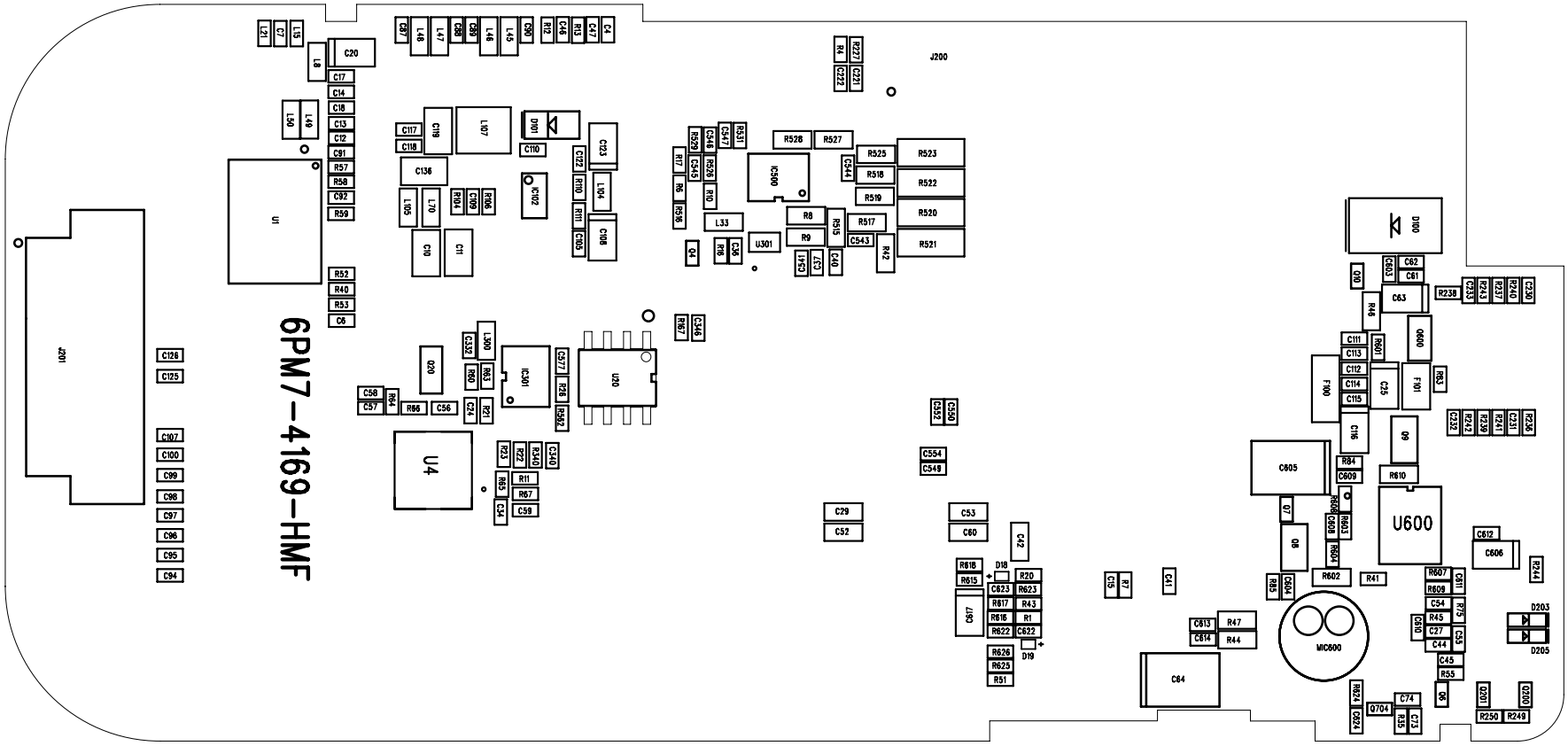

Bottom-Layer Layout Drawing of Main Board

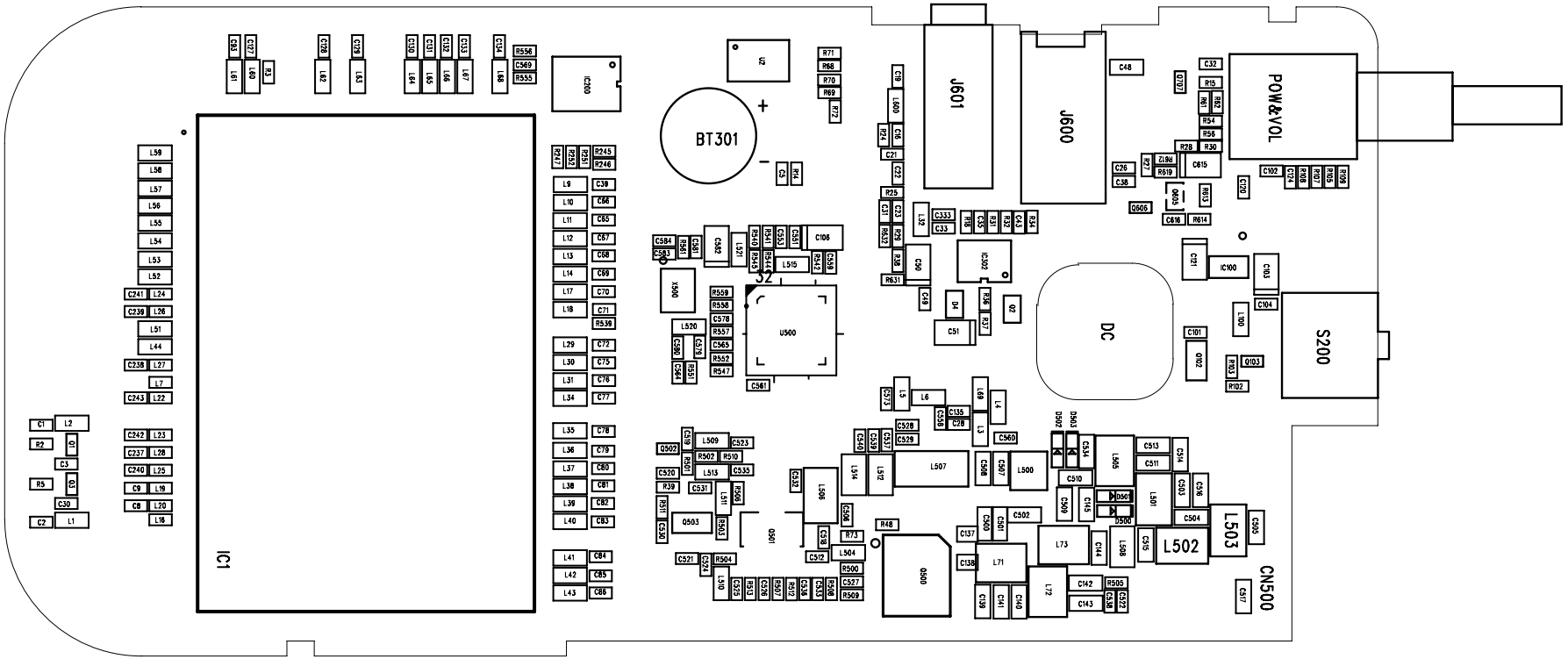

Schematic Diagrams of Module Board

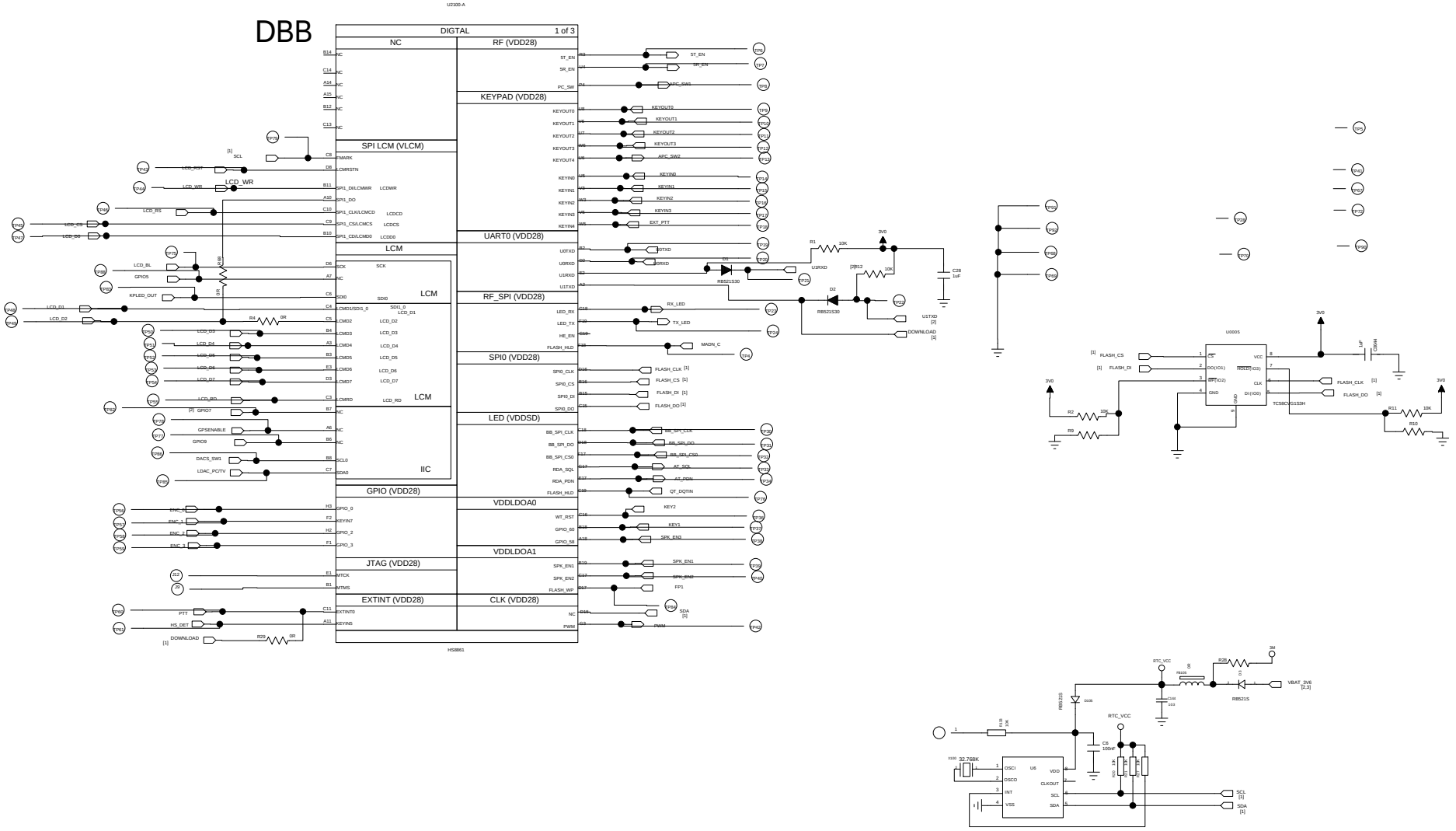

ABB

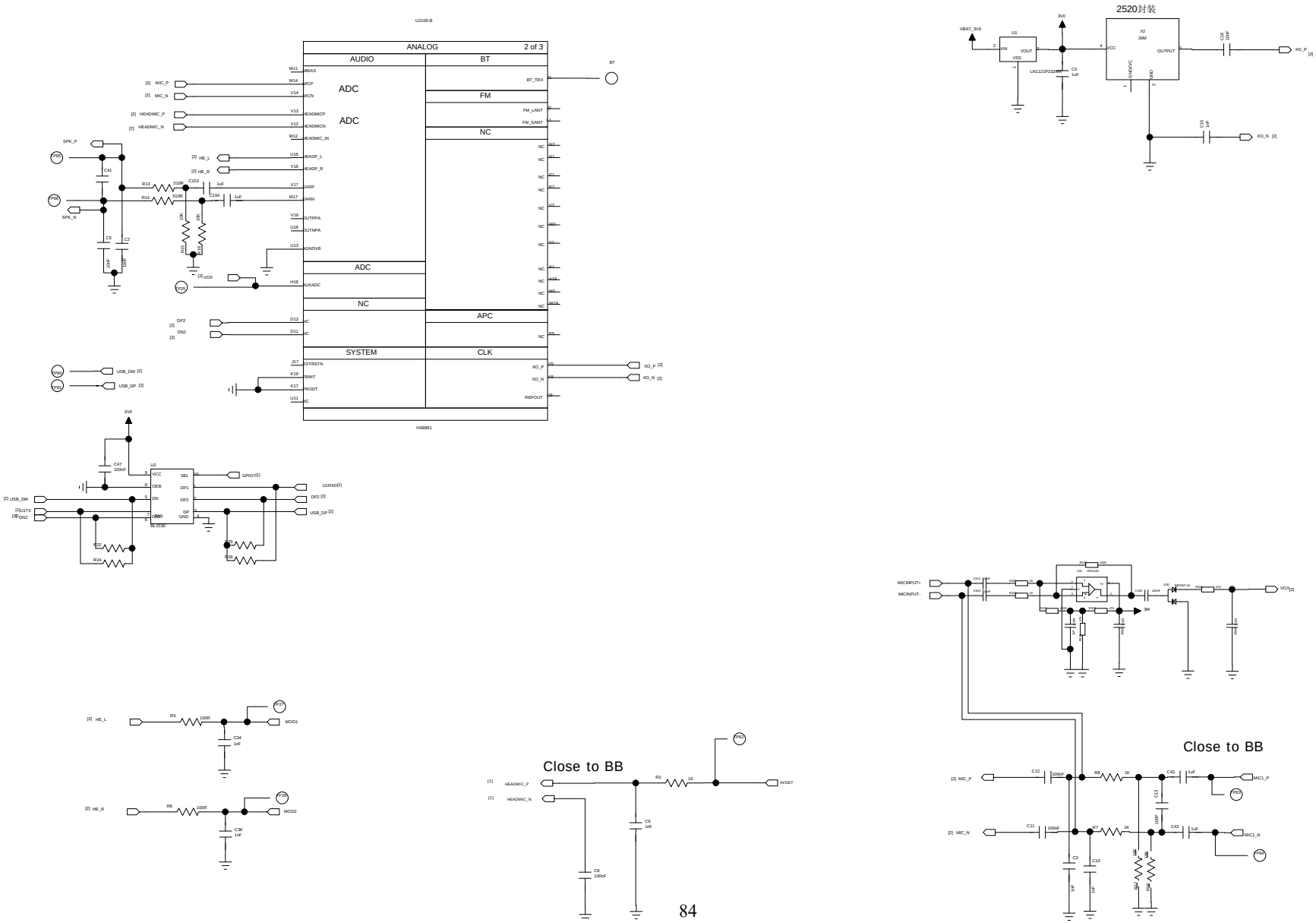
U2100-B
ANALOG
2 of 3
AUDIO
BT
ADC
ADC
FM
NC
ADC
NC
APC
SYSTEM
CLK
HS8861
2520封装
Close to BB
Close to BB

POWER

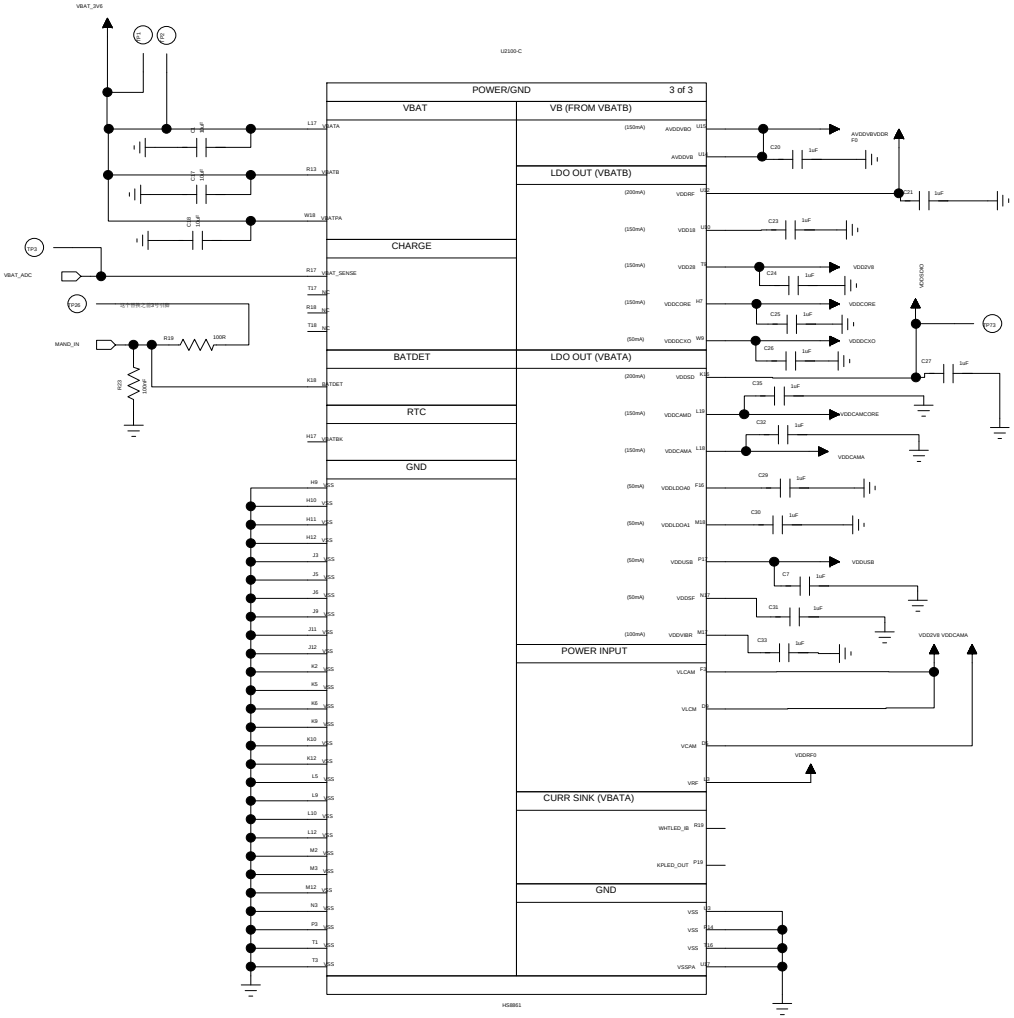
POWER/GND
3 of 3
VBAT
VB (FROM VBATB)
LDO OUT (VBATB)
CHARGE
BATDET
LDO OUT (VBATA)
RTC
GND
POWER INPUT
CURR SINK (VBATA)
GND
VBAT_3V6
VBAT_ADC
MAND_IN
VBATA
VBATB
VBATPA
VBAT_SENSE
BATDET
VBATBK
AVDDVBVDDB
VDDRF
VDD18
VDD28
VDDCORE
VDDDCXO
VDDSD
VDDCAMD
VDDCAMA
VDDLDOA0
VDDLDOA1
VDDUSB
VDDSF
VDDVIBR
VLCAM
VLCM
VCAM
VRF
WHTLED_IB
KPLED_OUT
VSS
VSSPA
VDDDCXO
VDDCORE
VDDCAMCORE
VDDCAMA
VDDUSB
VDDRFG
VDD2V8 VDDCAMA
HS8861

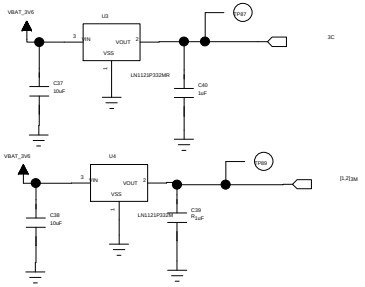
VBAT_3V6
U3
VIN
VOUT
VSS
LN1121P302MR
C37
10uF
C40
1uF
VBAT_3V6
U4
VIN
VOUT
VSS
C38
10uF
C39
1uF

Layout Drawing of Module Board

